Course SS104

Heating Fundamentals

Table of Contents

1. Gas Heating Systems

This chapter is an introduction to gas heating systems. It is designed to give you an insight into the types of fuels and configurations of heating systems used in the HVAC industry. We will group residential home heating systems into the following categories.

- Forced air
- Hydronic forced air
- Hydronic (radiant)
- Heat pump forced air
- Direct / Radiant

Forced air systems are the most popular systems in residential home heating. They use heated air delivered to the home through ductwork. There are also many different ways to heat the air in a forced air system.

- Gas forced air combusts a fuel inside of a heat exchanger.
- Hydronic forced air uses a radiator style coil filled with water heated by the combustion of a fuel.
- Heat pumps use a radiator style coil filled with hot gas refrigerant.
- Electric furnaces use an electric strip.

Hydronic systems use water instead of air to heat the home through baseboards or radiators. This is usually called radiant heat. Hydronic systems are often thought of as more comfortable than forced air. The radiators or baseboards are usually warm, giving off heat even when the boiler is off. The heat doesn't appear to turn on and off to the homeowner as with forced air systems. One disadvantage is that the ability to filter and cool the air has been lost, without installing another complete system.

Direct systems simply use a baseboard with an electric element (strip) in them, which gets warm, even hot to the touch when electricity is applied, similar to the element in a toaster, except on a larger scale and usually higher voltage. Four settings or a thermostat can centrally or individually control them.

1.1. Natural Convection Systems

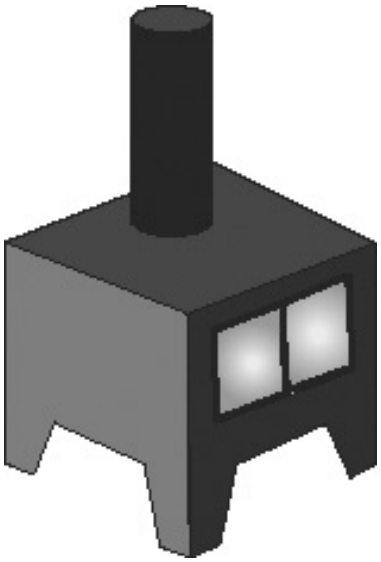

To better understand forced air heating, let's go back to convection heating. Even before the "furnace," this form of heating can be understood by imagining a cast iron stove in the middle of a small cabin. The heat conducted through the metal walls of the stove warms the air in the room. The lighter, hotter air in the room rises and causes the cooler, heavier air in the room to fall. This is an example of natural convection. As long as enough heat was generated, the cabin stays warm.

In a home, with many different rooms, ductwork is needed to get the hot air to all the rooms and bring the cold air back to the furnace. Originally, this "furnace" was nothing more than a very large cast iron stove with a box built around it and very large ductwork with few bends (restrictions), coming in and out of the box. This allowed the lighter heated air to rise to the home and the heavier cooler air to fall back down to the furnace. These furnaces were very large and were called "gravity" by their function, or "octopus" by their looks, furnaces. This is also a called natural convection.

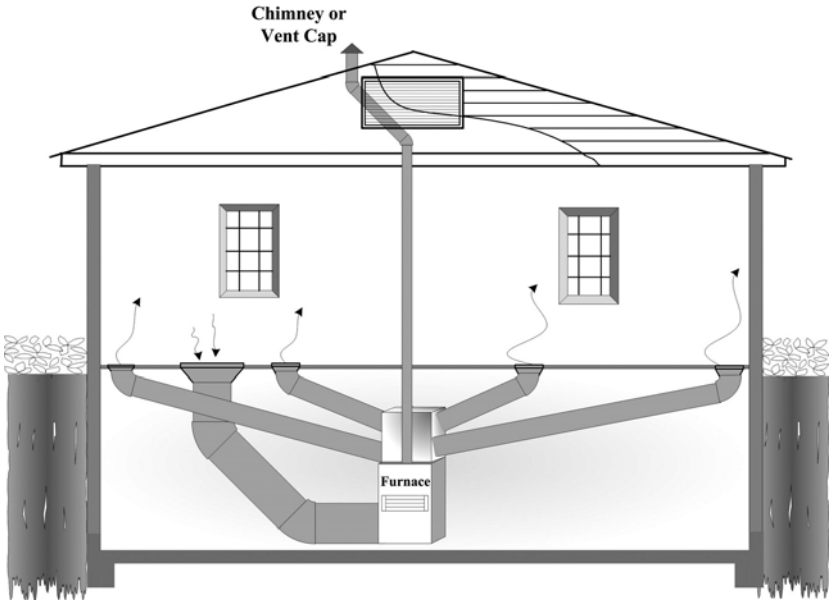

1.2. Forced Air Systems

At this point we will not talk about what was used to heat the air, just how the heated air is delivered to the home. So far all we know is that when cooler air is passed across a hot surface, the air is warmed.

When an electric motor and a blower wheel are added to the heating box, you have "forced convection," or forced air heating. Now the air can be moved to and from the home faster and more efficiently through a smaller furnace and smaller ductwork, compared to a natural convection system.

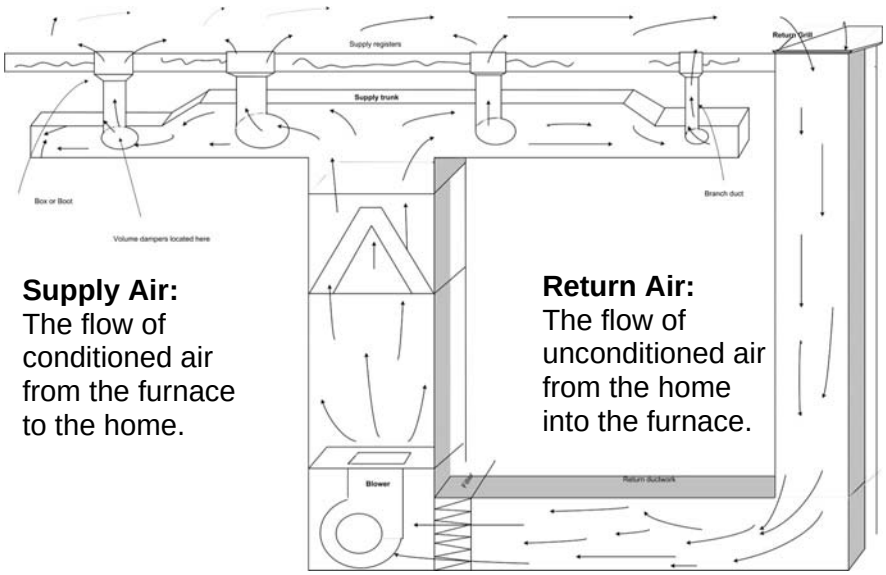

On convection systems, the ducts were very large so they would not slow down the natural convection process. On forced air systems they are smaller and can direct the air all the way across the room for better circulation and more comfort.

It may help to think of a forced air furnace as a box with two basic components.

- A "heating section" responsible for heating the air that is passed across it.
- A "blower section" responsible for moving the air to and from the home.

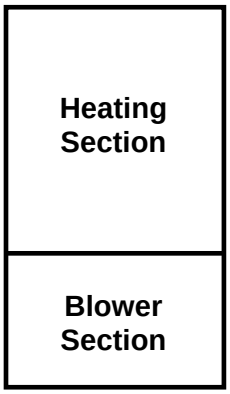

1.3. Furnace Systems

Now that we have a basic understanding of what a forced air system is, let's look at the different styles.

1.3.1. Upflow

- The unit is in the vertical position. The cooler, un-conditioned return air enters through the sides or the bottom, and the heated, conditioned supply air leaves the top of the unit.
- The air flows through the furnace in an upward direction.
- The blower is below the heat exchanger.
- This furnace is also called a highboy.
- This application is typically found in basements and closets.

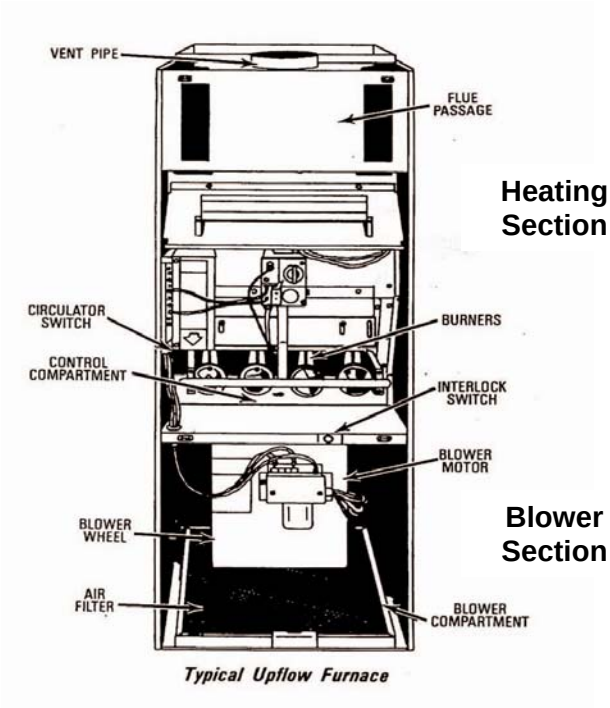

Typical Upflow Furnace

1.3.2. The Lowboy Furnace

- Another style of up flow furnace was called the lowboy. This up flow furnace actually sits horizontally.
- Air still flows upward out of one side of the furnace, but the return air enters the top of the furnace also on the other side. The airflow through the furnace is in a horseshoe pattern.
- Return air enters into the top of the blower section, and supply air leaves the top of the heat exchanger section.

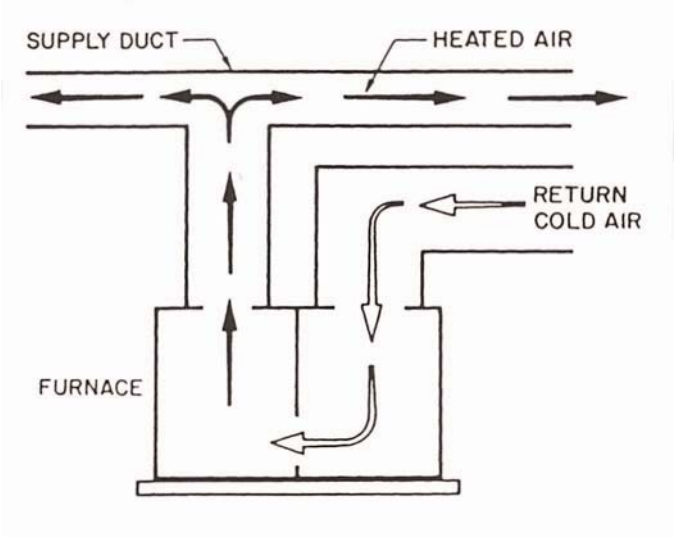

- The blower is next to the heat exchanger.
- This application is typically found in basements.

1.3.3. Down Flow (Counter Flow)

- The unit is in the vertical position. You will notice that the blower is above the heat exchanger. The cooler, unconditioned return air enters through the top of the unit and the heated, conditioned supply air leaves the bottom of the unit. The air flows through the furnace in a downward direction.
- This application is typically found in closets.

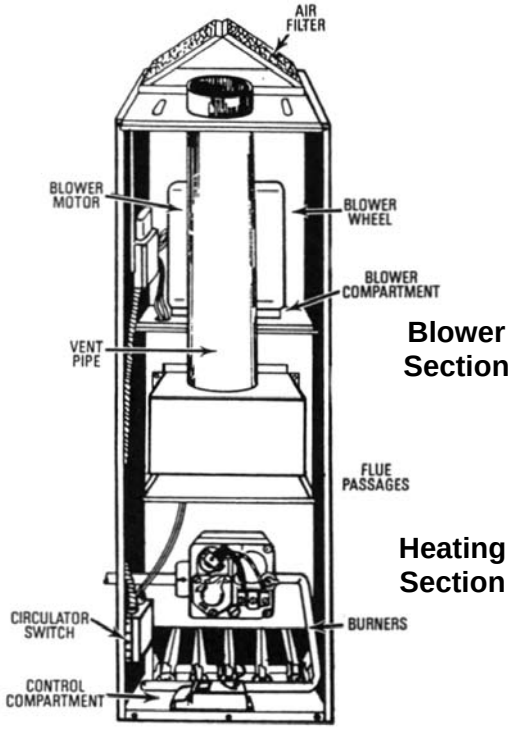

Typical Counterflow Furnace

1.3.4. Horizontal Flow Furnace

The unit is in the horizontal position, and the blower is next to the heat exchanger. The cooler, unconditioned return air enters one side of the unit, and the heated, conditioned supply air leaves the other side. The manufacturer determines the direction of flow from side to side. The air flows through the furnace from one side to the other; it can go either way depending on the design of the furnace.

The horizontal flow application is typically found in attics and crawlspaces.

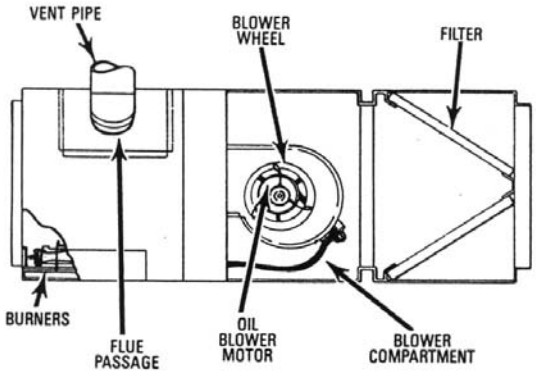

Typical Horizontal Furnace

Heating Section **Blower Section**

1.3.5. Hydronic Heating Systems

A hydronic system uses water to transfer the heat to the home instead of air as in a forced air furnace. Hydronic systems are usually referred to as "boilers," even though the water in a hydronic boiler does not boil when it is working properly. The heated water circulates through pipes from the boiler to the home, where radiators, baseboards, or air handlers release the heat into the home. The cooler water, as a result of releasing heat into the home, then returns to the boiler to be reheated.

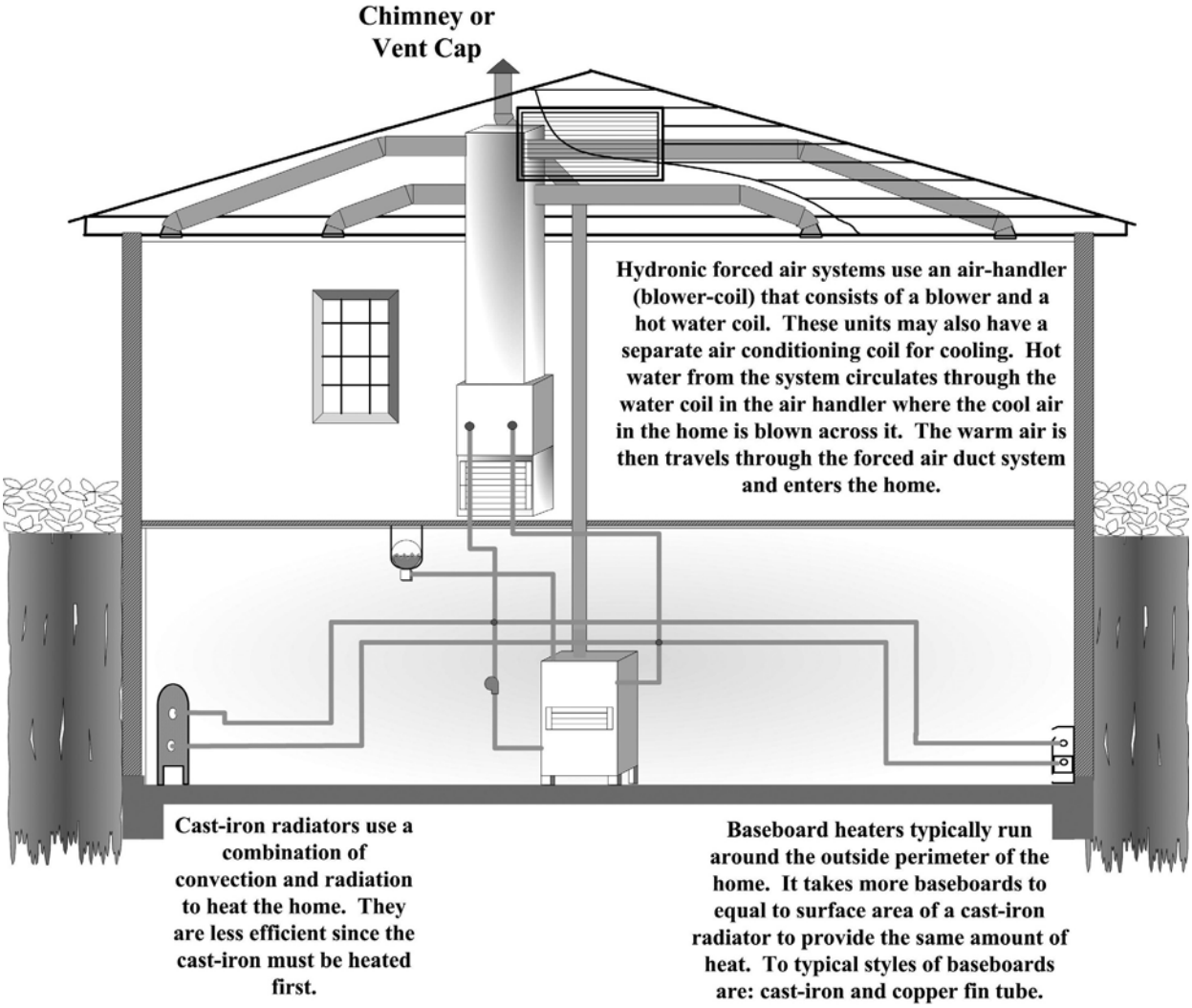

1.3.6. Direct Systems

These baseboards heat the home by convection in the same manner as a copper fin tube. Instead of heated water, an electric element is used to heat the tube and fins. These work well in buildings and areas where fuel is not available or space is not available for a furnace or boiler. They are very popular in condos.

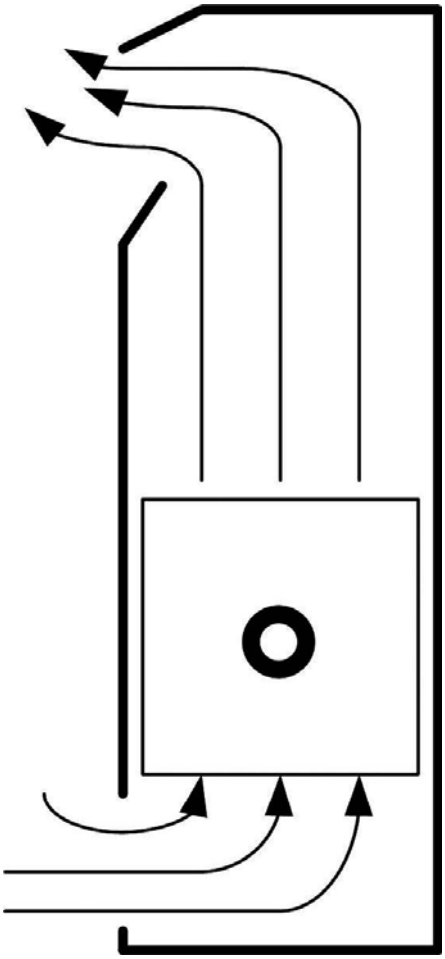

2. Review Questions – Gas Heating Systems

1) The ability of hot air to rise and cool air to fall is an example of what?

   a) Conduction

   b) Natural Convection

   c) Forced Air Convection

   d) Natural Conduction

2) Adding an electric motor and a blower wheel to move air is called what?

   a) Forced Convection

   b) Conduction

   c) Forced Conduction

   d) Natural Convection

3) The flow of unconditioned air from the house into the furnace is called what?

   a) Supply Air

   b) Combustion Air

   c) Return Air

   d) Nominal Air

4) The flow of conditioned air from the furnace to the house is called what?

   a) Supply Air

   b) Combustion Air

   c) Return Air

   d) Nominal Air

5) Natural Convection furnaces use _____ ductwork and registers so they would not slow down the natural convection process.

   a) smaller

   b) larger

   c) square

   d) oval

6) Forced Convection furnaces use _____ ductwork and registers and can direct the air all the way across the room for better circulation and more comfort.

   a) smaller

   b) larger

   c) square

   d) oval

7) Many different furnace systems exist for all applications in homes. The main difference between Up-flow (highboy and lowboy), Down-flow (Counter flow) and Horizontal-flow systems is what?

   a) The style of the heat exchanger

   b) The direction or flow of air through the furnace

   c) The fuel used

   d) Whether it is Natural or Forced Convection

8) The main difference between a Forced Air and Hydronic heating system is the medium used to transfer the heat to the home. What is primarily used in place of the air in Hydronic heating systems?

   a) Refrigerant

   b) Water

   c) Antifreeze

   d) Wood

3. Sources of Fuel

Many different fuels have been and are currently being used to provide the heat in furnaces and boilers. During our discussion about fuels, don't forget that we are only talking about the heating section now. It doesn't matter if we are heating water or air, or how that water or air is used to heat the home.

- Electricity
- Wood
- Coal
- Fuel oil
- Natural gas
- Propane
- Butane

Electricity

Direct heat using electricity is really nothing more than a bunch of permanently installed portable electric heaters, like the kind you can buy at your local hardware store. There are also all-electric furnaces, where a very large electric coil generates the heat. This is nothing more than an extremely large hair dryer, if you think about it. It still has a heating section and a blower section.

Wood

Obviously wood was used in our wood stove discussion, but in some areas it is still being used as we discussed, with a box built around it, and a blower to move the air faster and the heat farther. You may ask why. Well, it’s simple. If you have a lot of trees, you have free heat.

Coal

Coal is used primarily with our natural convection style "octopus" furnaces, although these are very rare today. If the physical furnace itself even still exists, it has probably been converted to natural gas.

Fuel Oil

Due to the major differences in the combustion of fuel oil compared to the others, we will discuss this as its own topic at the end of this manual. Suffice to say, fuel oil is used in forced air and boilers alike and is very popular in some areas of the United States and Canada.

Natural Gas, Propane, and Butane

These are the primary fuels that are used today for forced air and boiler systems. They have all been used from the time of the natural convection furnace to today.

Wood, coal, fuel oil, butane, propane, and natural gas all have one thing in common. They all combust a fuel inside of a metal box, so that air or water can be passed along the outside of the box to be heated. This box is called a heat exchanger, and it is what separates the combustion process from the air we breathe, but still allows that air or water to be heated safely. This is the heating section of our furnace.

Identifying the style of heating, and the fuel being used is the beginning of understanding each and every form of home heating systems on the market. Some variations of these basic styles are out there, but you will be able to figure them out from knowing the basics of each system.

Now that you understand how the heated air or water is distributed to the home, we will cover how it is actually heated. Since we will be discussing the combustion of a fuel, we will start with the combustion process itself.

Some fuels have been phased out or are sparsely used, due to their lack of efficiency and bulk of storage, such as wood and coal. Others are used primarily in outlying areas, where local utilities are not available, such as oil, propane and butane. Natural gas is the most widely used because it is delivered locally by pipe and is considered the safest fuel.

In this study, we are going to focus on forced air heating, using natural gas, propane and fuel oil.

4. Combustion Theory

This chapter is an introduction to combustion theory as it pertains to natural gas and propane. There are three essential elements that are needed to support combustion.

1) **Fuel:** Fuel can be classified as anything that will burn.

2) **Oxygen :** The oxygen in air helps to fuel the burning process. This "combustion air" is made up of approximately 20% oxygen (O2) and 80% nitrogen (N). Nitrogen is a non-burning inert gas.

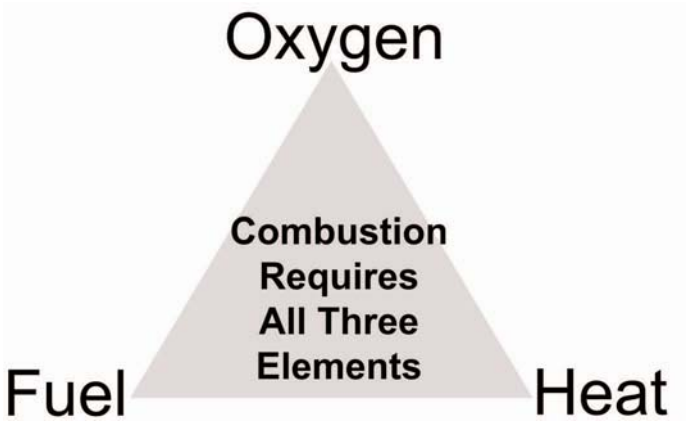

3) **Heat :** A source of ignition is typically provided by a flame, spark, or putting a fuel in contact with a hot enough surface. Combustion or burning is the result of the rapid oxidation of a fuel. This produces a large amount of heat and light. Oxidation is what happens when a material reacts with oxygen. When heat is added to a proper air fuel mixture, combustion takes place.

The amount of fuel necessary for proper combustion requires a complete understanding of the fuel being used, how it is supplied, and proper pressure regulation. Too much or too little fuel can lead to improper combustion. In this case, the triangle is out of balance.

4.1. Composition of Gases

Where do these gases come from?

Over the ages, decayed organic materials from plants and animals have seeped through layers of rock until they reached cavities or voids deep below the earth’s surface. In these cavities the material has been compressed from the weight of the earth. With the heat also found at these levels, a chemical action takes place and forms oil and gas. These trapped pockets of gas and oil are brought to the earth's surface through wells. Some gases may contain sulfur, in the form of condensables, that could corrode some

metals and often have a strong smell. They are removed as liquids by changing the temperature and pressure or both.

In their raw form, methane and ethane are odorless, colorless, and tasteless, and are the primary gases refined for natural gas. Propane and butane can be obtained from natural gas, or as a byproduct from the refining of oil. They are also practically colorless, odorless, and tasteless.

What is that smell?

Odorants are added to gasses before they are distributed to help with leak detection. Most odorants are sulfur-based and smell garlic-like.

The gases discussed here are generally used to supply heat energy and are called fuel gasses. As you will see, compounds of hydrogen (H) and carbon (C) atoms, known as hydrocarbons, make up the major portion of fuel gases.

4.2. Natural Gas

Natural gas is the most popular fuel used in the HVAC industry. Because of its properties and characteristics, it is more economical and desirable than other fuels for heating. Natural gas is non-toxic and non-poisonous.

Most people know natural gas as methane. What we call natural gas is a mixture of various gases, with methane usually present in the largest proportion. Some of the mixture could be ethane and a small amount of other gases, including propane, butane, and nitrogen.

One reason that natural gas burns so clean is the low amount of carbon.

Composition is 85% methane and 15% ethane. Normally!! Sometimes LP is injected to raise the BTUH value.

The methane molecule consists of one carbon atom and four hydrogen atoms. The ethane molecule is made up of two carbon atoms and six hydrogen atoms.

4.3. Liquefied Petroleum Gas

LPG, or LP gas, can be propane, butane, or a mixture of the two gases. It is primarily used in rural areas of the country where natural gas is not available.

- **Propane:** Propane is the most popular LP gas used in our industry. The propane molecule consists of three carbon atoms and eight hydrogen atoms.

- **Butane:** Butane is an LP gas that is rarely used and has been phased out in most areas for home heating. The butane molecule is made up of four carbon atoms and ten hydrogen atoms. It is the most complex of the fuel gas molecules.

5. Characteristics of Fuel Gases

5.1. Boiling Point

Not only are LP gases a fuel source; but they are also in the refrigerant family. Like any other refrigerant, LP gas is stored in tanks with the liquid settling on the bottom and vapor on the top in the tank. As the LP fuel is used out of the tank, the pressure within the vessel drops, lowering the saturation or "boiling point." The heat surrounding the tank causes a portion of the liquid to boil off into vapor. This process keeps a constant supply of vapor LP gas at the top for use.

Propane has a low boiling point, which makes it practical for above ground storage in markets that experience cold weather. Propane is more widely used as an LP gas than butane because it changes to the gaseous state (vaporizes) at lower temperatures under normal conditions. Propane vaporizes at a temperature of around -40° Fahrenheit.

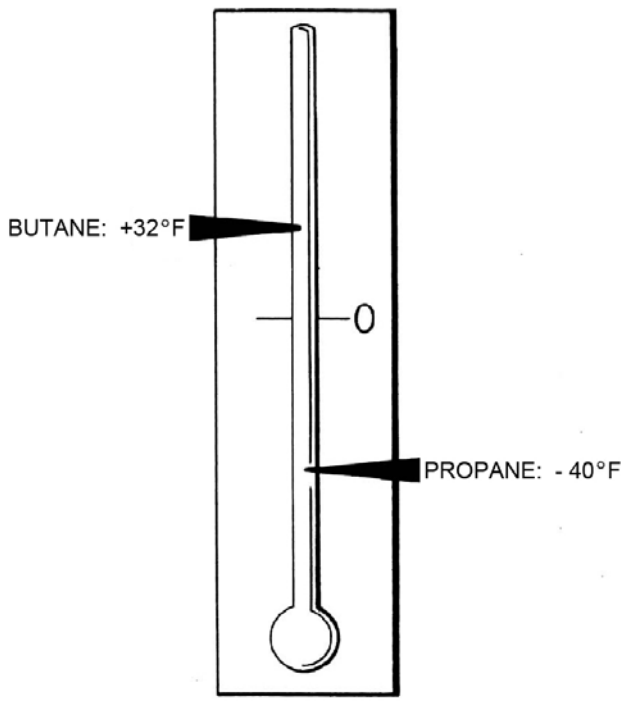

Butane has a high boiling point, which is why its storage tanks must be buried in order to keep the fuel warm enough to boil into vapor. If butane were subjected to temperatures below freezing, the tank would produce a slight vacuum instead of pressure. Butane will not vaporize at temperatures lower than +32° Fahrenheit.

Natural gas has an extremely low boiling point. It will never reach its boiling point in a natural environment and is not an issue in the industry.

5.2. Specific Gravity

Specific Gravity is a comparative measurement based on weight and volume. When a comparative measurement system issued, an item is selected and designated as the base. All other items measured are

referenced to the base. This reference item for measuring the weight of gases is dry air and its value is 1.0.

Dry Air = 1.0 Specific Gravity at Sea Level

Natural gas mixtures are lighter than air. They rise when there is a leak and mix easily with air. Both of these facts make natural gas easier and safer to work with than propane and butane. Natural gas typically has a specific gravity of .6. In other words, natural gas weighs 60% of what air weighs.

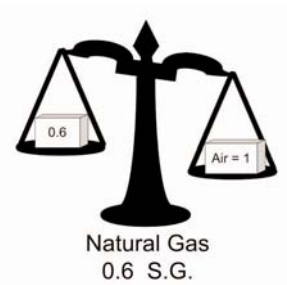

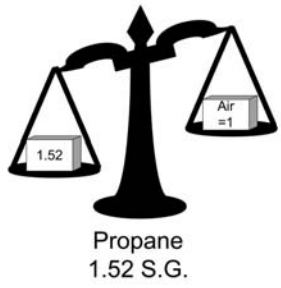

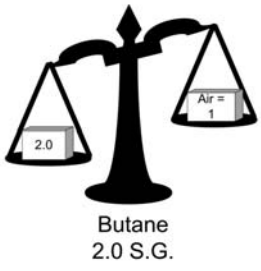

Propane and butane are both heavier than air, and butane is heavier than propane. Both gases will sink to the lowest place and pool if there is a leak. They also do not mix as readily with air. For this reason they require extra care in service and maintenance.

5.3. Ignition Temperature

Fuel must be raised to a specific temperature for combustion to take place. Listed below is the temperature needed for combustion of each specific fuel. This can come from an existing flame, such as a match or standing pilot, a spark that is hot enough, or a hot surface igniter that glows red-hot when electricity is applied to it.

Ignition Temperature (in air):

- Natural Gas: 1200° F
- Propane: 920 - 1020° F

Maximum Flame Temperature (in air):

- Natural Gas: 3400° F
- Propane: 3595° F

Notice that natural gas has a higher ignition temperature than propane. This is yet another reason it is safer than propane. Butane has an even lower ignition temperature. Even though any leak is dangerous, a small leak of propane or butane is more so due to their low ignition points, in addition to both fuels being heavier than air.

Natural gas is safer and is the preferred fuel for many reasons:

- It is cleaner burning, due to the fact that there are fewer carbon atoms in its make up, and it mixes easily with air for combustion.
- Being lighter than air, it will dissipate easily if there is a leak.
- It has a higher ignition point.
- It is non-toxic.

Remember that all fuels can be safe when they are used properly.

Upper Flammability Limits (U.F.L.) & Lower Flammability Limits (L.F.L.)

The gaseous state of matter is the only one that will combust or burn. For either a solid or a liquid fuel to burn, the material must first be vaporized or changed to gas. This usually requires a heat or pressure change.

For combustion to take place, the mixture of gas and air must be within certain limits. These are known as the upper and lower FLAMMABILITY limits.

Percentage of gas in a gas-air mixture:

	L.F.L	U.F.L
Natural gas	4%	14%
Propane	2.4%	9.6%
Butane	1.9%	8.6%

5.4. Units of Measurement

5.4.1. Cubic Feet (cu. ft.) (cf)

One cubic foot is the smallest unit used for measuring the gasses used for heating. All laboratory tests on the combustion process are based on one cubic foot of gas.

5.4.2. Centa Cubic Feet (CCF)

This term describes 100cf of natural gas, which is called 1 unit of gas. The utility companies use this unit of measurement as the method to sell natural gas to the consumer. This is also referred to as a Therm.

5.4.3. Therm

A therm is a unit of heat energy used in the gas industry. A therm is 100,000 BTU of heat energy.

- A therm of natural gas would be 100cf (at 1000 BTU/cf heating value)
- A therm of propane would be 40cf
- A therm of butane would be 31.25cf

5.4.4. Gallon

Propane and butane are typically sold by the gallon. These tanks can range from 125 - 1000 gallons. The average tank size for residential use is 500 gallons.

5.4.5. Pound

Propane is sold in small quantities by the pound. Portable tanks range from around 10 - 100 pounds and are used for a variety of applications, such as BBQ grills and recreational vehicles.

Conversions:

- 4.24 pounds in one gallon
- 36.39cf in one gallon of propane at 60° Fahrenheit

5.4.6. Heating Value

Heating value is a measurement of the heat produced per cubic foot (cu. ft.) of a specific gas burned.

One BTU is the amount of heat needed to raise the temperature of one pound of fresh water by one degree Fahrenheit. An ordinary kitchen match will produce about one BTU of heat.

Natural gas produces between 950 - 1150 BTUs of heat per cubic foot burned. 1050 BTUs per cu. ft. is typical from most local utilities

Propane produces about 2516 BTUs per cubic foot burned. 2500 BTUs per cu. ft. is typically used. This would equal about 91,960 BTUs per gallon.

Butane produces about 3200 BTUs per cubic foot burned.

As described earlier, it is easy to see that if a little bit of propane were added to the mixture of natural gas, the heating value would go up. Heating value is higher when there are more carbon and hydrogen atoms in each molecule of fuel gas. The heating value of natural gas has a range due to amount of other substances that are used other than methane. More ethane, propane, or butane will raise the heating value of natural gas, where less of any of these will lower it.

It is a good practice to find out what your local supplier’s heating values are for the fuels you will be using, especially in higher altitudes where the BTU content is typically adjusted for the lack of oxygen in the air.

1 BTU = the amount of heat it takes to raise the temperature of one pound of water 1 degree.

5.5. Fuel Delivery and Operating Pressures

5.5.1. Natural Gas

Natural gas is supplied by the gas utility in gaseous form through underground pipelines. The gas passes through a locking shutoff valve on its way to the main regulator for the home. This regulator drops the main line pressure (which may vary) to a pressure of around 7 to 9 inches of water column. The gas then travels through the meter so the usage can be measured. The gas leaves the meter at the same pressure on its way to each appliance in the home. The piping materials and construction are regulated by the NFGC (National Fuel Gas Code) and will vary based on local codes. The following is a typical piping layout.

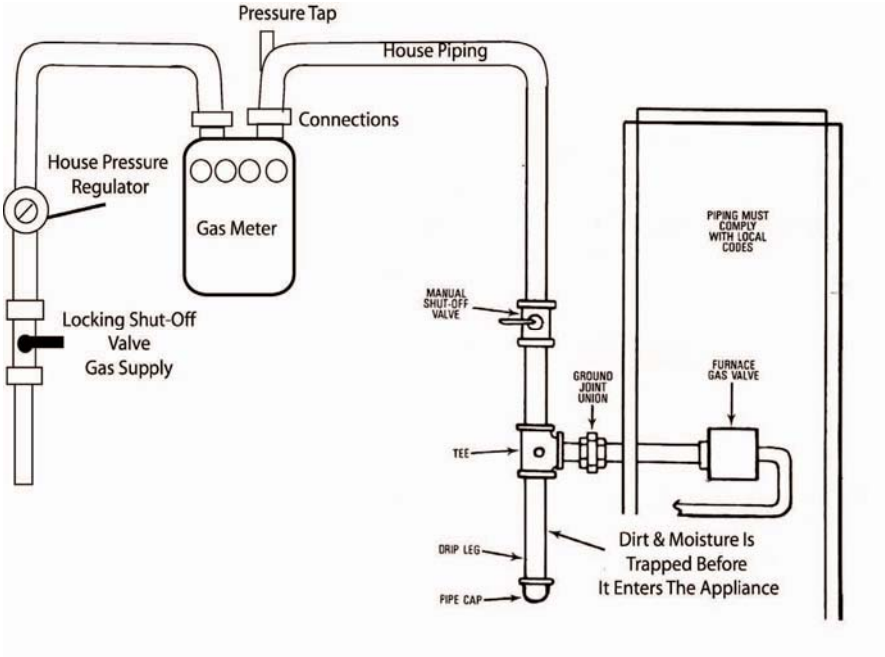

A shut off valve should be within reach of the furnace. The shutoff needs to be located before the union, drip leg, or flex gas line connection.

A drip leg should be installed to catch any trash or moisture in the gas supply.

The union should be installed in the first section of pipe outside the furnace so the line can be disconnected from the furnace for service.

5.5.2. LP Fuel Supply

From the refinery, LP gases are transferred by pipeline to a distribution terminal, where they are stored in liquid form in tanks. LP gas then leaves the distribution terminal by truck on its way to the end user, where it is also stored in large tanks.

Most propane tanks are above ground; however, in some areas below ground tanks are used because of neighborhood ordinances that prohibit above ground tanks.

5.5.3. Single Regulator Supply Systems

Most propane applications use one regulator that is mounted at the tank. This regulator takes the tank pressure and reduces it down to its house piping pressure of 11 inches of water column. This is the pressure that is delivered to each appliance within the home.

5.5.4. Dual Regulator Supply Systems

A dual regulator system is used in cases where there is a high load demand or there is a long distance between the tank and the house. The first regulator at the tank has an outlet pressure of 11 PSIG. The second regulator is mounted at the house and reduces the 11 PSIG down to 11 inches of water column for delivery to each appliance in the home.

5.5.5. Typical LP Supply System

The gas pipe construction from the shutoff valve to the gas valve in the furnace is typically the same for natural gas and propane.

Gas pipe size is based on the BTUH of the unit, length of pipe, and the type of fuel according to the NFGC.

5.5.6. Converting Fuels within Appliances

Appliances can be purchased set up from the factory for natural gas or propane. Most residential furnaces are manufactured set up for natural gas. A conversion "kit" is required to make all of the modifications that are necessary when converting a furnace. This kit must be purchased from the manufacturer for the specific model that is being converted. This is the only way to know for sure that all the modifications have been made. All manufacturer instructions for this purpose should be followed to the letter. Serious damage to the home and personal injury can occur from improper set up of a furnace.

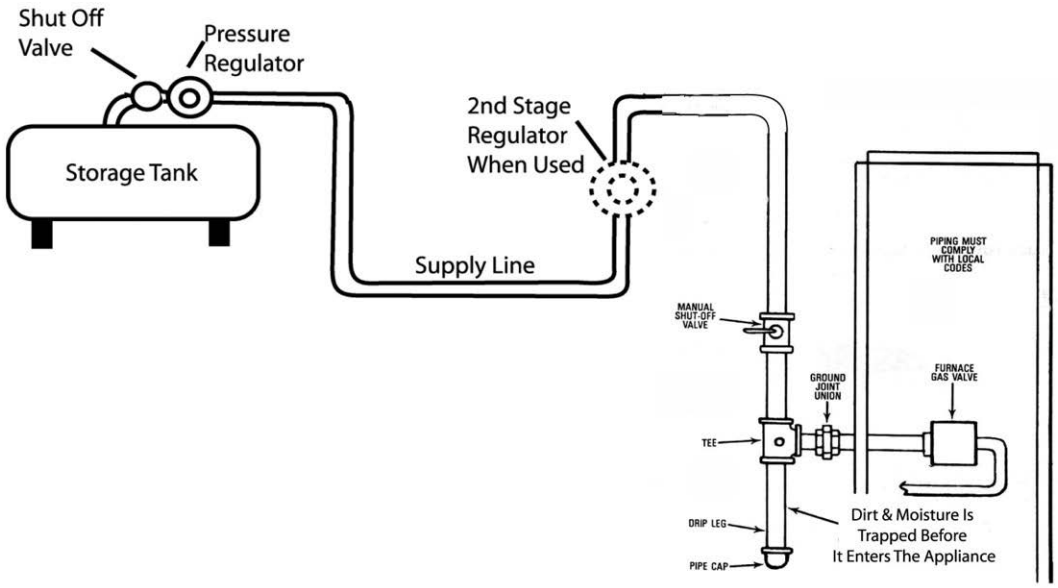

5.6. Gas Pressure Measurements

Supply pressure and main burner pressure can be measured in three different methods.

PSIG	Ounces	Inches of Water Column

The following scale will illustrate the comparison of each.

1 PSIG =	16 Ounces =	27.71 Inches of Water Column

The most common measurement is inches of water column (in. wc.) This can be checked with a "U" tube manometer, Magnehelic, or other properly calibrated gauge designed for checking gas pressure.

5.6.1. Main Burner Pressure Regulation

Most modern furnaces have a pressure regulator located in the gas valve. This regulator takes the supply gas pressure and regulates it to the proper manifold pressure for proper burner operation of the furnace.

This pressure, called manifold pressure, is adjusted within the following limits on many older standing pilot furnaces and some newer models as well.

- Natural gas: 3.5 in. wc.
- Propane: 10.5 in. wc.

While these are typical manifold pressure settings, not all furnaces are manufactured the same.

IT IS VERY IMPORTANT THAT MANUFACTURER'S DATA ON MANIFOLD PRESSURE BE FOLLOWED. There was a time when all furnaces ran at about the same manifold pressure. With new equipment that is not the case anymore. The information for proper manifold pressure is usually on the manufacturer's data plate located inside the furnace, as well as in the manufacturer's manuals for each furnace.

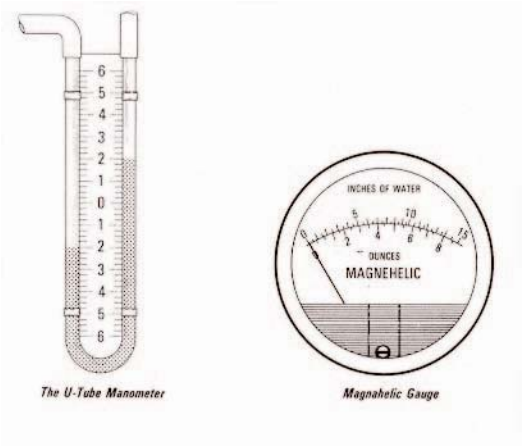

The U-Tube Manometer *Magnahelic Gauge*

6. Combustion Air

6.1. Oxygen

As previously mentioned, oxygen is needed for combustion. The air we breathe and use for combustion is not just oxygen though. Our atmosphere is made up of approximately 20% oxygen while the remaining 80% is nitrogen. The amount of oxygen needed for proper combustion varies depending on the fuel being used. Natural gas requires 2 parts oxygen to 1 part fuel for proper combustion. 10 cu. ft. of air is necessary to produce 2 cu. ft. of oxygen.

Combustion air requirements for proper combustion:

1 cu. ft. natural gas	10 cu. ft. combustion air
1 cu. ft. propane	23.5 cu. ft. combustion air
1 cu. ft. butane	30 cu. ft. combustion air

6.2. Excess Air

Since it is not practical to burn a gas with exactly the right amount of air, excess air is always present around the combustion process. About 50% excess air is typical. This amount varies depending on the fuel being used.

Example:

1 cu. ft. natural gas	10 cu. ft. combustion air
	5 cu. ft. excess air
	15 cu. ft. of air needed for proper combustion

It should be very obvious that it requires substantially more air to mix with propane and butane for proper combustion than for natural gas. However, these fuels also produce more heat.

6.3. The Combustion Process of Natural Gas

1 cu. ft. natural gas	
10 cu. ft. air =	8 cu. ft. nitrogen
	2 cu. ft. oxygen

The products of proper combustion are non-toxic.

11 cu. ft. of combustion products are produced:

1 cu. ft. carbon dioxide (CO2)

2 cu. ft. water vapor (H2O)

8 cu. ft. nitrogen (N2)

Nitrogen does not enter into the combustion process. But it must be present to obtain the required amount of oxygen for combustion. It does absorb heat from the combustion process that reduces the amount of heat available for transfer through the heat exchanger. It also increases the amount of combustion products, which need to be vented out of the home.

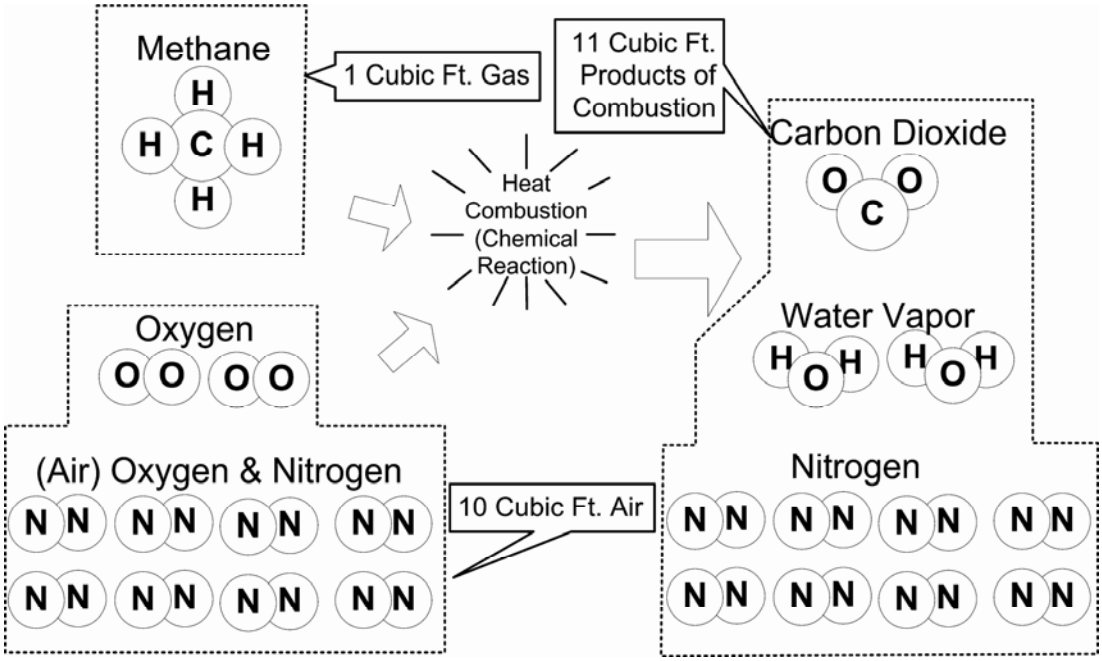

6.3.1. The Combustion Process of Natural Gas with Excess Air

This air is also unburned and becomes a part of the products of combustion. With 10 cu. ft. of combustion air, excess air would be 5 cu. ft (10 x .50(50%)). This would be approximately 1 cu. ft. of oxygen and 4 cu. ft of nitrogen.

In this example of a typical combustion process, there is a total of 16 cu. ft. of combustion products produced when 1 cu. ft. of natural gas is burned.

Excess air assures that there will always be enough oxygen present to mix with the fuel for proper combustion. Proper combustion takes place when there is the right amount of fuel, heat, and oxygen. The products of proper combustion are safe and non-toxic. When incomplete combustion occurs, there is another very dangerous product of combustion, carbon monoxide (CO).

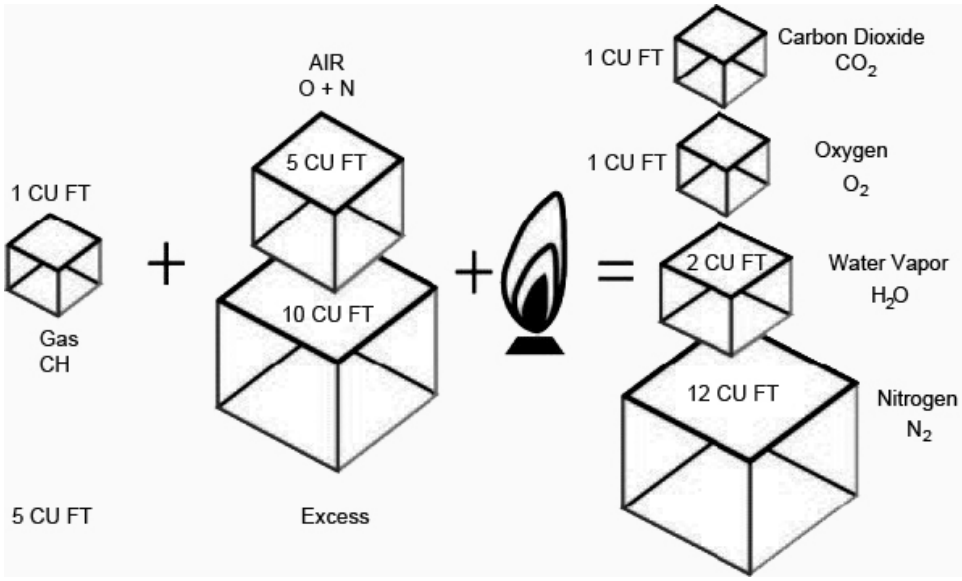

6.3.2. Incomplete Combustion

Causes of incomplete combustion:

- Insufficient air (excess fuel)
- Poor mix of fuel and air - if oxygen does not come into contact with all of the fuel, some of the fuel will be unburned.
- Insufficient temperature - a flame impinging on a cooler surface will result in incomplete combustion.
- Poor venting - products of combustion cannot get away from the combustion process and are re-circulated back with combustion air.

Additional by-products of incomplete combustion -

- Aldehyde (toxic, poisonous, acrid in odor and irritating to the eyes, nose and throat.
- Carbon monoxide (CO)

Anytime that soot or partially burned carbon particles are noticed in fuel burning furnaces, it points towards incomplete combustion. Remember that natural gas has less carbon in its make-up than propane. This doesn't mean the natural gas furnaces will not produce soot, or that propane furnaces will always

produce soot. It simply shows the ability of any fuel to produce soot when combustion is incomplete. Natural gas however is more forgiving than propane.

6.3.3. Physical Properties of Carbon Monoxide

1) Carbon monoxide is a highly toxic (poisonous) gas.

2) It is colorless, odorless, and tasteless. It cannot be detected without a proper meter.

3) Its specific gravity is 0.980 - slightly lighter than air.

4) It disperses rapidly and evenly into the air in a house.

5) It is carried readily with convection air currents within a closed environment (house).

6.3.4. CO and the Human Body

CO can harm or, in extreme cases, kill humans and animals.

1) CO can be absorbed by the body through the lungs directly to the blood.

2) It binds with blood hemoglobin.

3) It displaces oxygen.

4) It is 242 times more attracted to blood cells than oxygen.

5) It restricts oxygen flow to the body's vital organs.

Various authorities have set human exposure standards to CO.

These are the levels of CO that are measured in the "breathable air," or air that is circulated throughout the home or business.

1) EPA recommends a maximum level of 9 PPM over 24 hours.

2) OSHA recommends a maximum of 50 PPM over 8 hours.

6.3.5. CO Standards for Flue Gas

To date, the only performance standards governing the emission of carbon monoxide by an appliance are published by AGA, American Gas Association, as approved by ANSI, American National Standards Institute. All manufacturers of gas appliances displaying the AGA Seal of Approval are required to demonstrate their products' compliance to these standards.

ANSI standards permit appliances to be operated under conditions that can cause small amounts of carbon monoxide (CO) to be produced.

The maximum allowable concentrations vary by the appliance type. Vented appliances, such as furnaces and water heaters, are restricted to a maximum CO emission of 0.04 % or 400 PPM (Air-Free).

CO Air-Free is specifically used to describe flue gases. Due to the excess and dilution air mentioned earlier, flue gas CO is diluted with unburned oxygen. Using a single gas analyzer for CO, the meter only gives the level of CO it reads. A single gas CO meter with a reading as low as 235ppm could already be 400ppm Air-Free, depending on the amount of excess oxygen diluting the reading. To get a true Air-free reading, an oxygen meter could be used to give the level of excess O2. With this information, a formula is available to turn the CO and O2 readings in to CO Air-Free, or a combustion analyzer could be used. This meter will do all the work for you giving CO, O2, and CO Air-Free at the touch of a button. This information is new to most technicians, including experienced ones, and will be covered more in our courses.

There can and will be a certain amount of CO present in the flue gas of a furnace. Perfect combustion is not possible in the field. Keeping the CO level within the standards listed above is why we spend so much time on the combustion process.

When a furnace is vented properly and combustion is at its peak performance, CO should still be tested both in the home and in the vent (flue) to be sure it is within guidelines. As stated above, carbon monoxide's most dangerous quality is that it cannot be sensed without a CO meter. In our courses, we discuss CO detection in depth both in the home and the flue.

CO is not an issue when furnaces have proper combustion and are vented properly. That is to say that the products of combustion are provided with a safe passage to the outdoors. We have discussed what is takes to provide proper combustion of the two most popular gases—natural gas and propane. In the next chapter we will discuss what it takes to provide proper venting of a furnace for both of these fuels.

7. Review Questions – Fuel/Combustion

1) What are the three requirements for combustion?

   a) Fuel, nitrogen, and heat

   b) Fuel, oxygen, and heat

   c) Fuel, carbon dioxide, and heat

   d) Fuel, air, and heat

2) Natural Gas and Propane are the two most popular fuels used. What is Natural Gas made of?

   a) Methane and Ethane

   b) Methane and Oxygen

   c) Carbon and Oxygen

   d) Hydrogen and Oxygen

3) In its raw form Natural Gas has no smell, however, odorants are added by the distributor to aid in leak detection that make it smell like sulfur. What is one reason that it burns so clean?

   a) It has no carbon atoms in it s makeup.

   b) It has extra carbon atoms in its makeup.

   c) It has no hydrogen in its makeup.

   d) It has fewer carbon atoms in its makeup.

4) Of the LP gases, propane is more widely used than Butane. What unit of measurement is typically used for the sale of propane for home heating use?

   a) Cubic Feet

   b) The Therm

   c) The Gallon

   d) The Pound

5) Why is Butane not as widely used as Propane?

   a) It produces less BTU per cu. ft. than propane.

   b) It does not vaporize into a gas in temperatures below freezing.

   c) It requires the use of a double insulated above ground tank.

   d) It does not vaporize into a gas in temperatures above freezing.

6) What does having a specific weight of .6 tell you about natural gas?

   a) It is lighter than air.

   b) It is heavier than air.

   c) It weighs the same as air.

   d) It is lighter than water.

7) What does having a specific weight of 1.5 tell you about propane?

   a) It is lighter than air.

   b) It is lighter than natural gas.

   c) It is heavier than natural gas.

   d) It weighs the same as air.

8) Heat is measured in BTU's, and is described as the amount of heat necessary to raise one pound of _____, one degree Fahrenheit.

   a) Wood

   b) Any substance

   c) Water

   d) Steel

9) What is the ignition temperature of Natural Gas?

   a) 1200 degrees Fahrenheit

   b) 3400 degrees Fahrenheit

   c) 1200 degrees Celsius

   d) 920 – 1020 degrees Fahrenheit

10) One of the reasons Propane is considered less safe than Natural Gas is its lower ignition temperature making it more volatile. What is the ignition temperature of Propane?

   a) 1200 degrees Fahrenheit

   b) 3400 degrees Fahrenheit

   c) 1200 degrees Celsius

   d) 920 – 1020 degrees Fahrenheit

11) A Therm is equal to 100,000 BTU of heat energy. What is a CCF equal to?

   a) 500 cubic feet of fuel

   b) 10 cubic feet of fuel

   c) 1000 cubic feet of fuel

   d) 100 cubic feet of fuel

12) The heating value of fuels listed is an average since local utilities can change the content of their fuels, which will affect the amount of BTUH per cubic foot. What is the average heating value of Natural Gas?

a) 1500 BTUH

b) 100,000 BTUH

c) 1050 BTUH

d) 700 BTUH

13) What is the only acceptable means of converting a furnace from use of one fuel to another?

a) Install a new manifold pressure spring

b) Use a factory conversion kit

c) Install a new gas valve

d) Install a new gas valve and burners

14) The manifold pressure, regulated by the gas valve in the furnace, should always be set according to the data plate for that furnace. The typical manifold gas pressure for Propane is 10.5 in. wc. What is the typical manifold pressure for Natural Gas?

a) 16 ounces of pressure

b) 3.5 in. wc.

c) 3.5 PSI

d) 9 to 11 in. wc.

15) Natural gas is supplied through underground pipelines at high pressure to a locking shutoff valve, is then regulated to a lower pressure for use by the appliances in the home, and finally metered before entering the home. What is the typical regulated pressure delivered to the home?

a) 10.5 in. wc.

b) 3.5 in. wc.

c) 7 – 9 PSI

d) 7 – 9 in. wc.

16) At a minimum, how many cu. ft. of air is required to combust 1 cu. ft. of Natural Gas?

a) 15 cu. ft.

b) 10 cu. ft.

c) 5 cu. ft.

d) 1 cu. ft.

17) At a minimum, how many cu. ft. of air is required to combust 1 cu. ft. of Propane?

a) 23.5 cu. ft.

b) 10 cu. ft.

c) 15 cu. ft.

d) 30 cu. ft.

18) Since it is not practical to burn a gas with exactly the right amount of air, excess air is always present around the combustion process. What amount of excess air is typical?

a) 100%

b) 50%

c) 5%

d) 10%

19) How much excess air is added to the products of combustion for Natural Gas?

a) 15 cu. ft.

b) 10 cu. ft.

c) 5 cu. ft.

d) 1 cu. ft.

20) What are the three products of proper combustion?

a) Carbon dioxide, aldehyde and nitrogen

b) Carbon dioxide, water vapor and nitrogen

c) Carbon monoxide, oxygen and water vapor

d) Carbon monoxide, water vapor and nitrogen

21) Incomplete combustion can be caused by poor venting, insufficient temperature, poor mix of fuel and air, and what?

a) Insufficient return air

b) Insufficient supply air

c) Insufficient nitrogen

d) Insufficient combustion air

22) Two additional by-products of incomplete combustion are Aldehydes and _____?

a) Excess oxygen

b) Carbon Dioxide

c) Carbon Monoxide

d) Sulfur

23) Unburned carbon particles caused by incomplete combustion can appear as what?

a) Water vapor

b) Excess nitrogen

c) Soot

d) Sulfur residue

24) Carbon Monoxide is a toxic gas that is harmful to the human body. Which one of the following is not a characteristic of CO?

a) It is colorless, odorless, and tasteless.

b) It is heavier than air and typically will pool in low spots.

c) It is absorbed by the body through the lungs directly to the blood.

d) It displaces oxygen and restricts oxygen flow to the body's vital organs.

25) What is the maximum level of human exposure to CO in 24 hours according to the EPA?

a) 9 ppm

b) 50 ppm

c) 400 ppm

d) 235 ppm

26) What is the maximum allowable concentration of CO Air-Free in the vented gasses of a furnace or water heater according to the AGA?

a) 400 ppm Air-Free

b) 800 ppm Air-Free

c) 100 ppm Air-Free

d) 235 ppm Air-Free

27) A flue CO reading of _____ ppm with a single gas analyzer that only detects CO could have a CO Air-Free level of as high as 400 ppm (the maximum level according to the AGA) depending on the amount of excess and dilution air in the flue gas.

a) 400 ppm

b) 800 ppm

c) 100 ppm

d) 235 ppm

8. Combustion Air and Venting

Air is a vital component for combustion, and critical for complete combustion without CO. Just as critical is the ability to vent the products of combustion away from the combustion process and safely out of the home. That will be the scope of this chapter.

- Where and how combustion air gets to the furnace
- Where and how the vented products leave the home

Adequate provisions for combustion air, ventilation of furnace, and dilution of flue gases must be made. See "Air for Combustion and Ventilation" sections of the National Fuel Gas Code, ANSI Z233.1 (latest edition) or CAN/CGA-149 Canadian Installation Codes (latest edition) or applicable provisions of the local building codes.

Understanding combustion air and how it is provided to the furnace is key for proper combustion and ventilation. We have covered some of the specific codes for providing combustion air. Lack of proper combustion air can lead to many problems in the home with the furnace and other appliances. This will be discussed more in our courses.

There are other methods for bringing combustion air to the furnace (mechanical room). For example, the IMC (International Mechanical Code) and your local codes may have more than what is covered here. Remember that local codes will always supersede national codes.

8.1. Understanding Combustion and Venting

We now know what it takes to provide proper combustion. Fuel delivery was discussed in length, as well as the amount of air (oxygen) needed. Now we need to understand how the air and the products of combustion are delivered to and from the outdoors.

8.1.1. Simple Combustion and Venting

Think about a campfire. When the fire goes down, all you need to do is add more wood (fuel). All of the air needed for combustion is provided by nature. There is no need for venting the harmful combustion products to the atmosphere because they are already there.

Now let's bring that campfire into a fireplace. The fuel delivery is the same as a campfire. Combustion air comes from the house (as long as the home is not air tight). The chimney provides venting of the harmful combustion products to the atmosphere. The opening to the chimney is directly above the combustion process (fire) with nothing to restrict or divert it from venting up and out of the home.

The only reason for discussion about a campfire and a fireplace is to show that before furnace burners and heat exchangers were enclosed in a box placed farther inside the home, there was not a need for such concern about combustion air, proper fuel supply, and venting. But when home heating systems were designed to sit inside the home and combust a fuel inside a heat exchanger without supervision, proper combustion air, fuel delivery, and venting became very important. So important that one of the dangerous by products of improper combustion, carbon monoxide (CO), now has its own in house detector sold at every hardware, home improvement, and department store.

8.2. Bringing Combustion Air into the Home

The following pages list the combustion air requirements as required by NFPA (National Fire Protection Association). The National Fuel Gas Code 2002 (NFPA 54) is used as a reference for the regulations for gas appliances. The Standard for the Installation of Oil-Burning Equipment 2001 (NFPA 31) is used as a reference for the regulations for oil-fired appliances. These codes are subject to change from time to time.

Although gas and oil appliances are regulated by different NFPA codes, the combustion air requirements for both types of fuel are the same, with a couple of exceptions. There are footnotes on some of the drawings on the next few pages that explain the differences.

As we have previously discussed, fuel-burning appliances require the proper amount of combustion air to burn efficiently and safely. There are several methods that will allow for the proper delivery of combustion air to these appliances. The term "ventilation" defines "the movement of air into the appliance for combustion and venting." The following pages will describe the specifications for ventilation air required for combustion and venting in the different applications.

Note: *Local codes can have regulations that are more stringent than national codes. They may not allow all of the following methods for providing combustion air to a heating unit. Local authorities may also treat an existing installation differently than that of new construction or the replacement of an existing heating unit. Always refer to local codes.*

8.2.1. Confined Space

A "confined space" is defined as "an area that is less than 50 cubic feet per 1000 BTUH of all appliances in that space." With a space of this size, there is not enough infiltration of air into the space to provide adequate ventilation for the combustion and venting process. In confined space applications, ventilation air must be brought into the space using one of the following methods.

8.2.2. Confined Space Using Vertical Ducts or Openings to the Outdoors

When using vertical ducts or openings to supply ventilation to a confined space, there must be a permanent opening commencing within 12” of the top, and another permanent opening commencing within 12” of the bottom of the space. Each opening shall communicate directly with the outdoors or to a space that communicates freely with the outdoors, such as a ventilated attic or crawl space. In this example, the lower opening can either be from a ventilated crawl space (A), or from a duct into a ventilated attic (B). The upper opening (C), communicates with the ventilated attic. Each opening must have a free area of 1 sq. in. per 4000 BTUH of combined input from all appliances in the space.

Note: *On gas-fired appliances, the minimum dimension of any opening shall not be less than 3 in. in any dimension.*

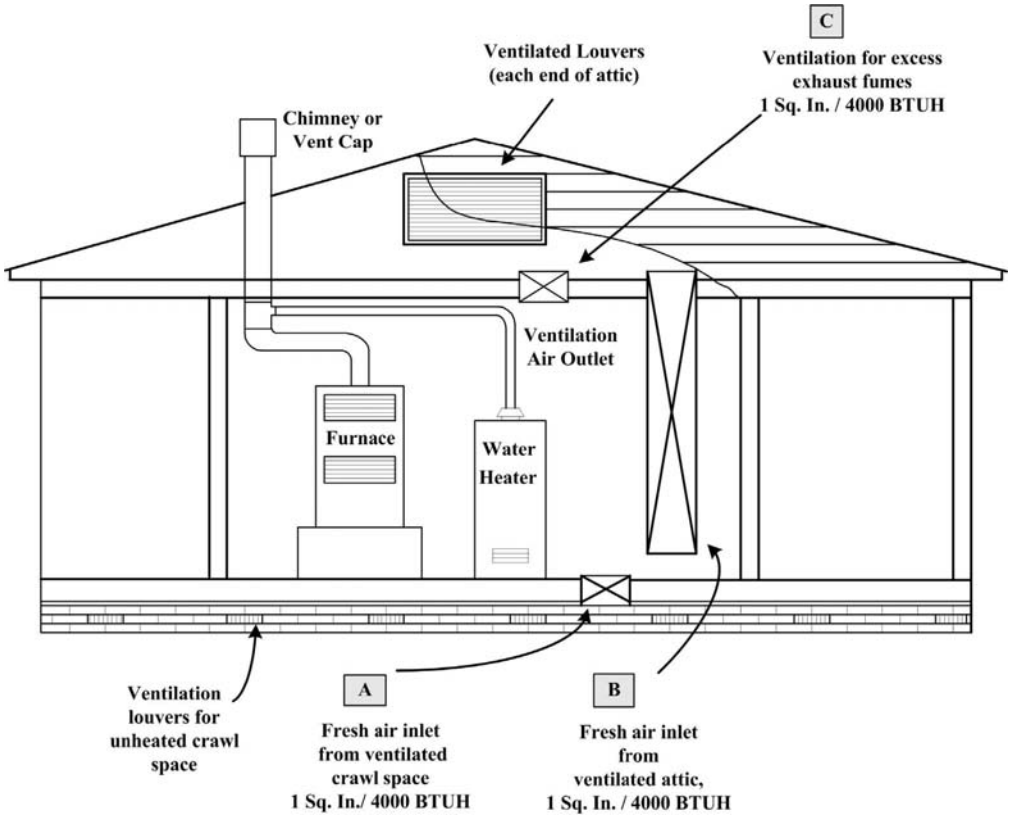

8.2.3. Confined Space Using Horizontal Ducts or Openings to the Outdoors

When using horizontal ducts or openings to supply ventilation to a confined space, there must be a permanent opening commencing within 12” of the top, and another permanent opening commencing within 12” of the bottom of the space. Each opening shall communicate directly with the outdoors or communicate through a duct to the outdoors or into a space that communicates freely with the outdoors. In this example, both ducts (D) are connected directly with the outdoors. Each opening must have a free area of 1 sq. in. per 2000 BTUH of combined input from all appliances in the space.

Note: *On gas-fired appliances, the minimum dimension of any opening shall not be less than 3 inches in any dimension.*

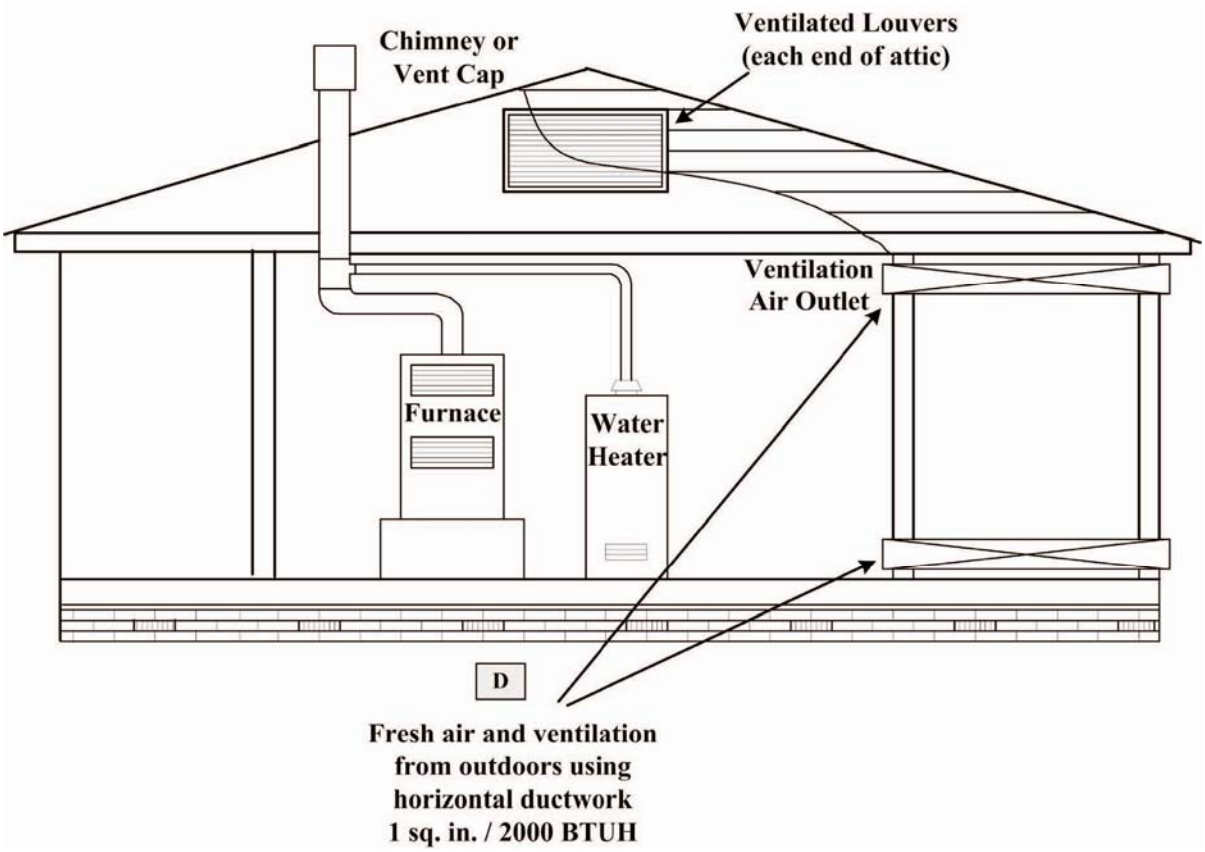

8.2.4. Confined Space Using a Single Opening to the Outdoors (Gas Only)

When a single opening is used to supply ventilation to a confined space for gas appliances, the permanent opening must commence within 12” of the top of the space. The opening shall communicate directly with the outdoors or communicate through a duct to the outdoors or into a space that communicates freely with

the outdoors. In this example, either opening (E) can be used. The opening must have a minimum free area of 1 sq. in. per 3000 BTUH of combined input from all appliances in the space.

Note: *This provision requires:*

1) *The appliance to have a minimum clearance of one inch on the sides and back and six inches on the front.*

2) *The opening shall not be less than the area of all vent connectors in the space.*

Note: *The Single Opening Method Is Not Approved in NFPA 31 for Fuel Oil!*

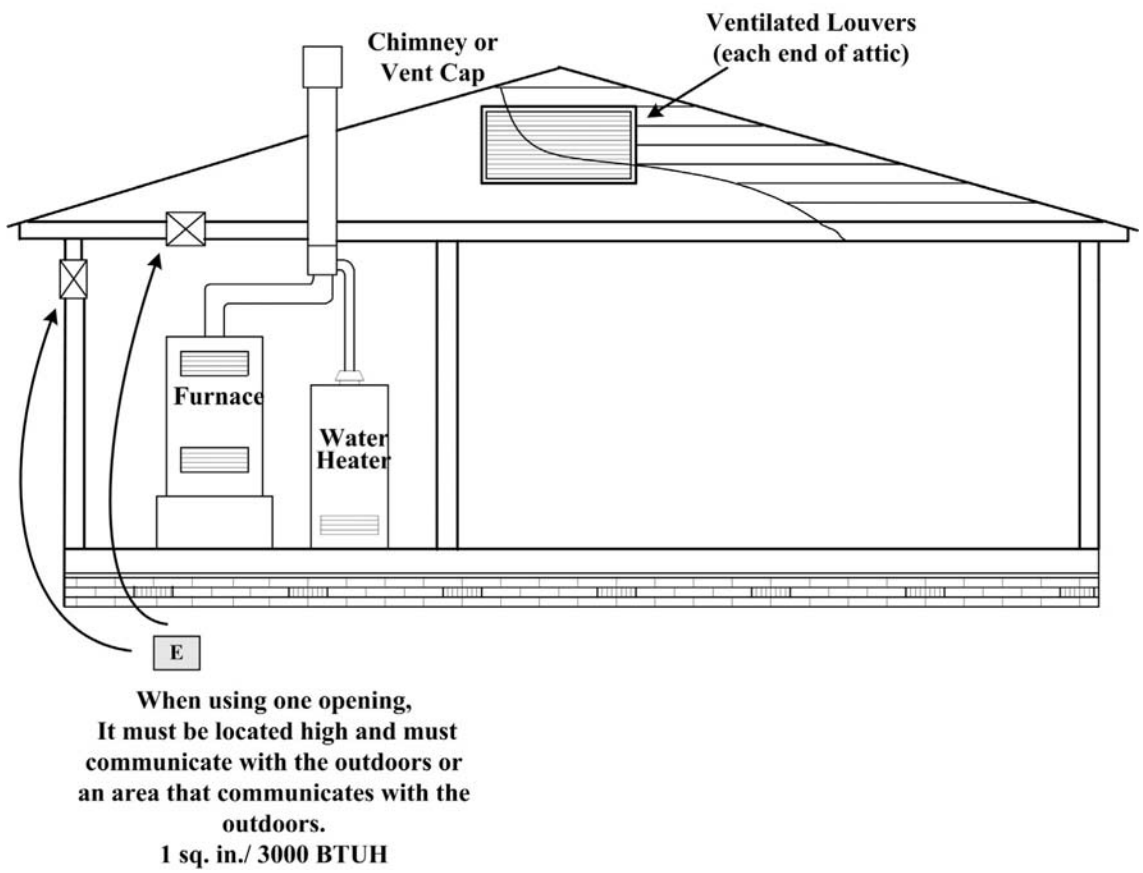

8.2.5. Unconfined Space Using Air from Indoors

An "unconfined space" is defined as "an area that has a minimum of 50 cubic feet per 1000 BTUH of all appliances in that space." With a space this size, there is usually enough infiltration into the structure to support the combustion and venting process. All rooms that connect to the space where the appliance is located that have permanent openings that cannot be closed off by doors are considered part of the unconfined space.

Keep in mind that when a heating unit is located in a conditioned space that is unconfined, it uses up warm air from the home to support the combustion and venting process like an open fireplace. The air is then replaced by cold air infiltrating the home through cracks; leaky doors, windows, and every place air can find its way into the home.

Note: *When a heating unit is located in an area that meets the 50 cu. ft. per 1000 BTUH requirement for an unconfined space, but the area is constructed so tightly that normal infiltration is not available, the following requirements must be met.*

- *On gas heating units, one of the other methods in this section must be used to bring combustion air into the room.*
- *On oil heating units, an opening may be installed to the outdoors or to an area that freely communicates with the outdoors having a minimum free area of 1 sq. in. per 5000 BTUH combined rating of all appliances in the space.*

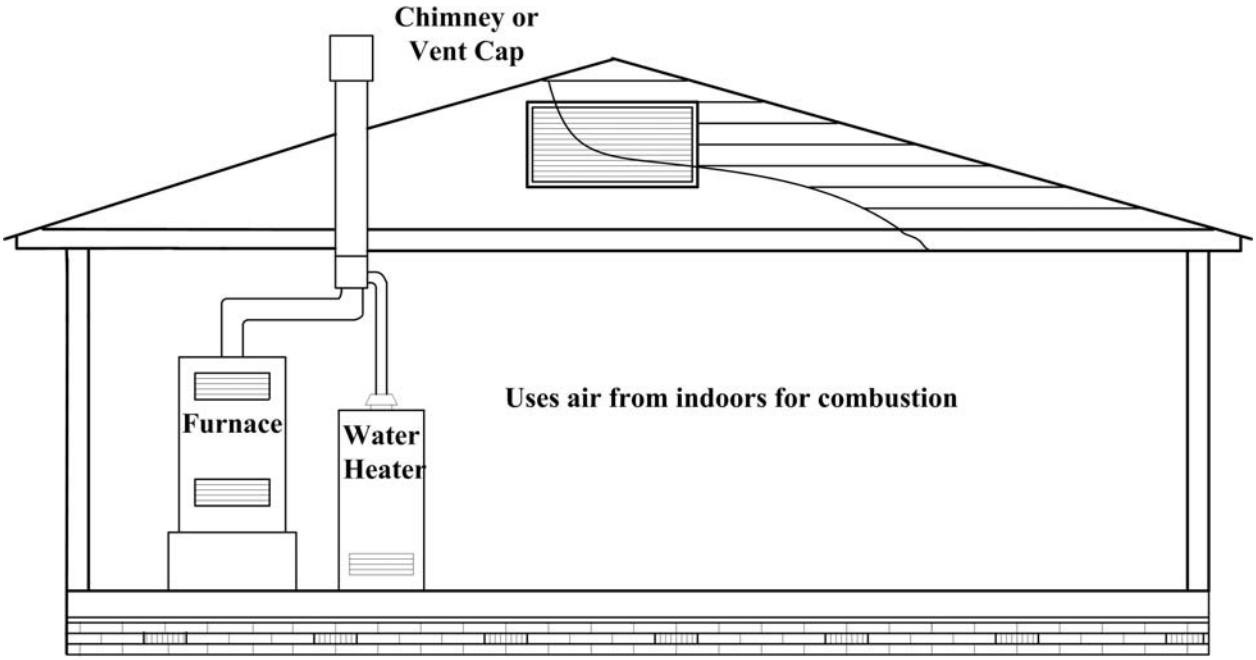

8.2.6. Confined Space Using Inside Air

When combustion air is supplied from inside the structure to the confined area, there must be two permanent openings that communicate with an area of the structure that meets the requirements for an unconfined space. One opening must be provided commencing within 12” of the top of the space and the other opening commencing within 12” of the bottom of the space (F). Each opening must have a

minimum free area of 1 sq.in. per 1000 BTUH of combined input from all appliances and not be less than 100 sq. in..

Note: *On gas-fired appliances, the minimum dimension of any opening shall not be less than 3 inches in any dimension.*

Note: *Rooms on the same floor can be combined to meet the volume requirements as long as the rooms have permanent openings that cannot be closed off by doors or be combined with ventilation openings that meet the above criteria. When combining areas on different floors, NFPA 54 requires 2 sq. in. per 1000 BTUH for gas appliances.*

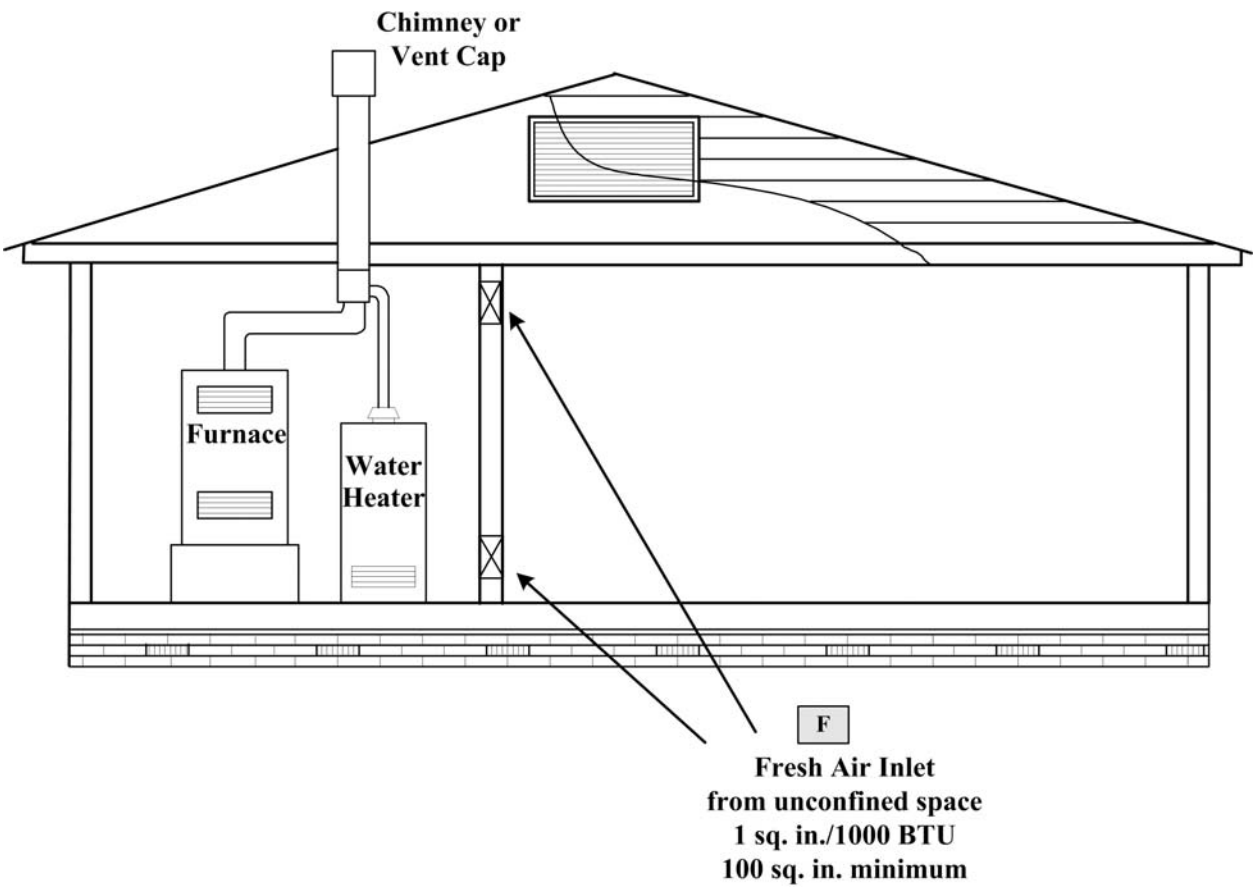

8.3. Venting Systems for In-Home Heating Systems

Venting is the movement of combustion products out of the system through a chimney or vent pipe. The venting system can also be referred to as the "flue."

Three basic functions of a vent:

1) It must convey all of the hot combustion gases to the outside atmosphere.

2) It must protect the structure from fire hazards due to overheating.

3) It must prevent the escape of combustion gases into the living spaces, where they would be a health hazard.

8.3.1. Natural Draft

Natural draft is the movement of air into the combustion zone and out of the combustion zone caused by the difference in weight of hot and cool air.

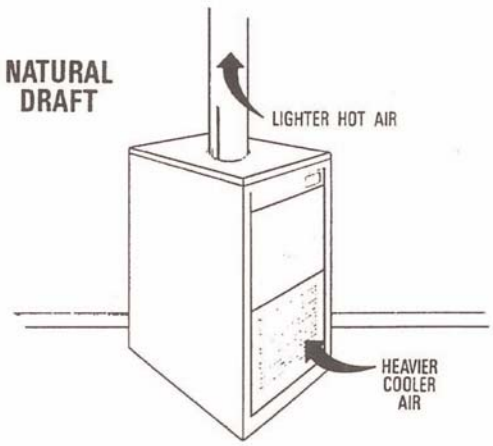

- As air is heated, it increases in volume and becomes lighter. This makes it rise through the vent system.
- As the heated air rises, heavier and cooler room air is drawn into the combustion chamber to take its place.

This movement of air is called **draft**.

Where the furnace and vent systems are designed for draft to occur naturally, which is the hot air can rise unrestricted, it is called natural draft. A fireplace works on this principle also.

Draft that occurs naturally creates a negative pressure in the vent system. That is the difference in pressure between the warm flue gasses traveling up the vent system and cooler outside air. A draft gauge can be used to measure this difference in pressure between the atmosphere and the air heated by combustion. It is very important to understand that a vent system has less pressure than atmospheric when the unit is operating for proper combustion and venting to take place.

Remember that word "unrestricted"? It is the key to natural draft. If hot air is to rise, it must be able to do so without too much restriction. Most venting systems will describe proper venting as being "as vertical as possible." It is usually impossible, like a fireplace, to have the furnace located where the vent can travel

straight up. So, where changes in direction need to be made, they should be done with as much upward pitch as possible to allow for draft.

8.3.2. Draft Diverters (Draft Hoods)

Draft diverters are installed between the outlet of the appliance and the vent. They have a relief opening to allow air from the room (dilution air) to be drawn into the vent by the draft force. The draft diverter provides the following:

- The relief opening in the draft hood breaks the vent system to minimize changes in the draft forces caused by wind action. This prevents a downdraft from forcing air down into the appliance, potentially causing flame rollout.
- It adds dilution air to the vent system to mix with the flue gasses. This cools down the flue gas and helps slow down the draft to increase efficiency.

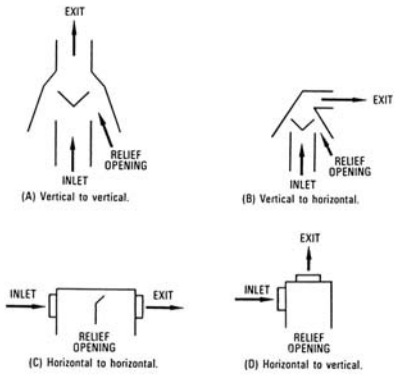

Typical Draft Diverters

In a discussion of combustion and ventilation air, it is very important to understand that when furnace has a draft diverter, an extra 15 cu. ft. of dilution air will be necessary for proper venting. This in turn will have a direct effect on proper combustion if venting is disturbed.

8.3.3. Testing for Proper Draft

1) Operate the furnace for 15 minutes.
2) Light a wooden kitchen match, and then blow out the flame.
3) Immediately move the smoking match tip to the draft hood relief opening. If smoke is drawn into the draft hood, the vent is working properly.

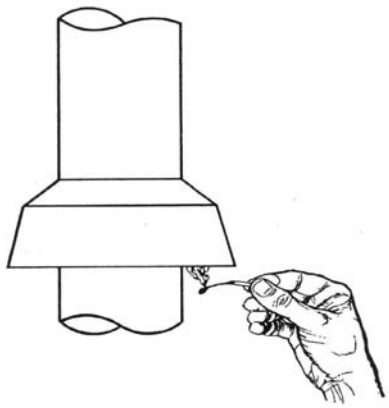

8.3.4. Fan-Assisted - Natural Vent Systems

Most 80% AFUE furnaces require a mechanical fan called an "induced draft blower" to provide the draft through the heat exchanger. It is not possible naturally due to the added restriction in the chamber. These

systems use a conventional metal vent and have the same natural flow throughout the vent pipe as a natural draft system. The pressure within the vent pipe is a negative pressure.

8.3.5. Fan-Assisted - Forced Vent Systems

High efficiency 90%+ AFUE furnaces require the same type of induced draft blower as 80% furnaces, but they have enough force to exhaust the combustion products through the vent system. After most of the heat is removed in the home, there isn't enough heat left in the vent system to create a draft. These furnaces use PVC pipe to vent the combustion products to the outdoors and have a drain line to dispose of the moisture that condenses in the furnace and vent system.

8.4. Types of Gas Vents for Natural Draft Systems

1) **Class A Chimney**

   a) May be constructed of masonry, concrete, or metal.

   b) Masonry materials may deteriorate when exposed to the combustion products from natural gas.

      i) A fired clay tile liner is installed in a masonry chimney when heating with gas.

      ii) A metal pipe is used to connect the furnace to the chimney.

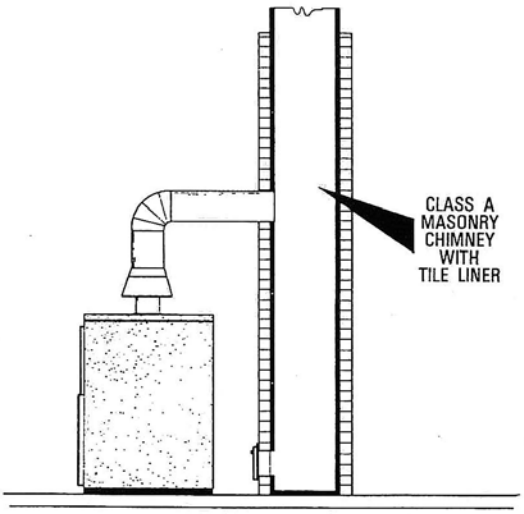

Class A Chimney

2) **Type B Vents**

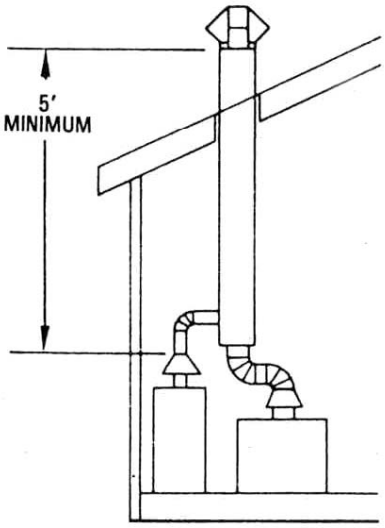

a) B vents can be used to connect the furnace to a masonry chimney or as the entire venting by itself where a masonry chimney is not available. The outer wall is much cooler than the inner wall where the hot gases are traveling and can be run through floors, ceilings, and roofs with 1” clearance to combustibles.

b) The height of Type B vents must not be less than 5 feet in vertical height above the highest connected draft hood.

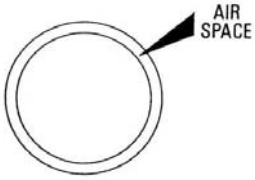

Type B Double-Wall Vent

3) **Type BW Vents**

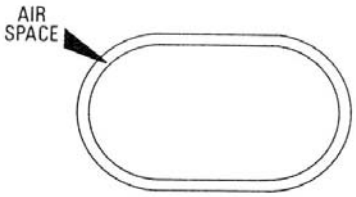

Type BW Vent

a) Must be made of non-combustible, durable materials.

b) Most common are vents made of steel with a double wall construction.

c) The air space between the walls acts as an insulator.

d) Provides easier installation in a wall due to its configuration. It is a type “B” vent for a wall called type BW.

e) Used to vent recessed heaters (wall furnaces). Typically acts as the entire venting system.

f) Double wall constructions.

g) Oval shaped, due to the oval-shaped opening of the furnace it is used with.

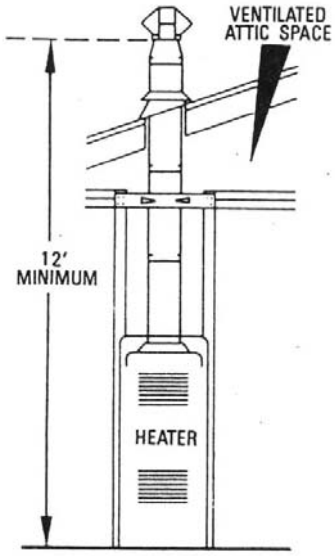

8.5. Vent Connections

Do's and Don'ts:

1) Tees should be the same size as common vent.

2) Interconnection tees should be placed at the highest possible point for maximum connector rise.

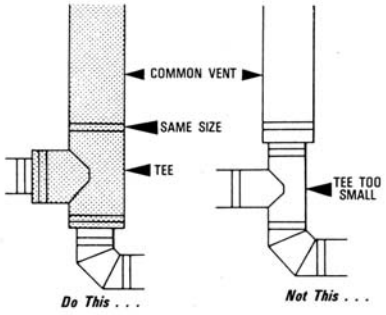

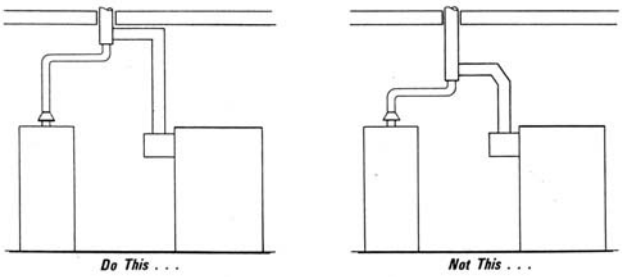

As you can see, there are many ways to vent a furnace. Proper venting provides the combustion products "flue gases" a means of leaving the furnace and the home safely and allowing for fresh combustion air to enter into the combustion process.

Believe it or not, these fundamentals that allow for proper operation of a furnace are widely misunderstood and not always followed in our industry. You are already well on your way to becoming a professional heating technician.

9. Review Questions – Combustion Air & Venting

1) Where are the regulations for combustion air and venting listed for gas burning appliances?

   a) NFPA 54 (The National Fuel Gas Code)

   b) NFPA 31

   c) EPA

   d) OSHA

2) When a furnace is located in a "confined space", combustion air can be supplied to the space the furnace is located in by what means?

   a) Through a clothes dryer vent.

   b) From a duct communicating with the outdoors

   c) From the supply air duct system to the furnace

   d) Through an open door or window

3) When using horizontal ducts or openings to supply combustion air to a confined space, each opening must have a free area of 1 sq. in. per _____ BTUH of the combined input from all appliances in the space.

   a) 1000

   b) 2000

   c) 3000

   d) 4000

4) A _____ is defined as "an area that has a minimum of 50 cu. ft. per 1000 BTUH of all appliances in that space.

   a) Confined Space

   b) Unconfined Space

   c) Living Space

   d) Outer Space

5) Which of the following is not one of the functions of a vent system?

   a) Protect the structure from fire hazards due to overheating

   b) Provide additional heat to the home

   c) Convey all of the hot combustion gases to the outside atmosphere

   d) Prevent the escape of combustion gases into the living spaces

6) When a furnace and vent system is designed so that draft can occur due to heated, lighter air rising, we call this _____.

   a) Typical Draft

   b) Forced Draft

   c) Natural Draft

   d) Up Draft

7) What pressure is created in the vent system when draft occurs naturally?

   a) Positive

   b) Negative

   c) 3.5 in. wc.

   d) 7 – 0 PSI

8) When a furnace has a draft diverter, how much extra dilution air is typically necessary for proper venting?

   a) 1 cu. ft.

   b) 5 cu. ft.

   c) 10 cu. ft.

   d) 15 cu. ft.

9) What is the purpose of the induced draft blower in a fan assisted – Natural Vent System?

   a) Push the combustion products through the heat exchanger and out through the vent.

   b) Pull the combustion products through the heat exchanger where they will then vent naturally.

   c) Pull the combustion products through the heat exchanger and then push them out the through the vent.

   d) Push the combustion products through the heat exchanger where they will then vent naturally.

10) What is the purpose of the induced draft blower in a fan assisted – Forced Vent System?

   a) Push the combustion products through the heat exchanger and out through the vent.

   b) Pull the combustion products through the heat exchanger where they will then vent naturally.

   c) Pull the combustion products through the heat exchanger and then push them out the through the vent.

   d) Push the combustion products through the heat exchanger where they will then vent naturally.

11) What is required in a masonry chimney when exposed to the combustion products from natural gas?

a) It must be at least 30’ tall.

b) It must be at least 6’ in diameter.

c) It must have a fired clay tile liner.

d) It must have a stainless steel liner

12) What is the minimum vertical height for Type B vents?

a) 5’ above any connected draft hood.

b) 10’ above any connected draft hood.

c) 10’ above the highest connected draft hood.

d) 5’ above the highest connected draft hood.

10. Furnace Sequence of Operation

Forced air furnaces are not as complicated as they may seem. Even today's more complicated systems are based on the fundamentals we will cover here.

10.1. Forced Air Furnaces

Now that we have covered the combustion and venting process, we know how the heat is created. But just how does that heat get to the home and what turns it on and off? It is time to pull it all together using the most common furnace, forced air.

All of the components of the furnace and how they work together will be covered.

First let’s pull back and take a look at a typical installation of a furnace with the electrical, gas, and venting all connected to get an idea of how it all fits together.

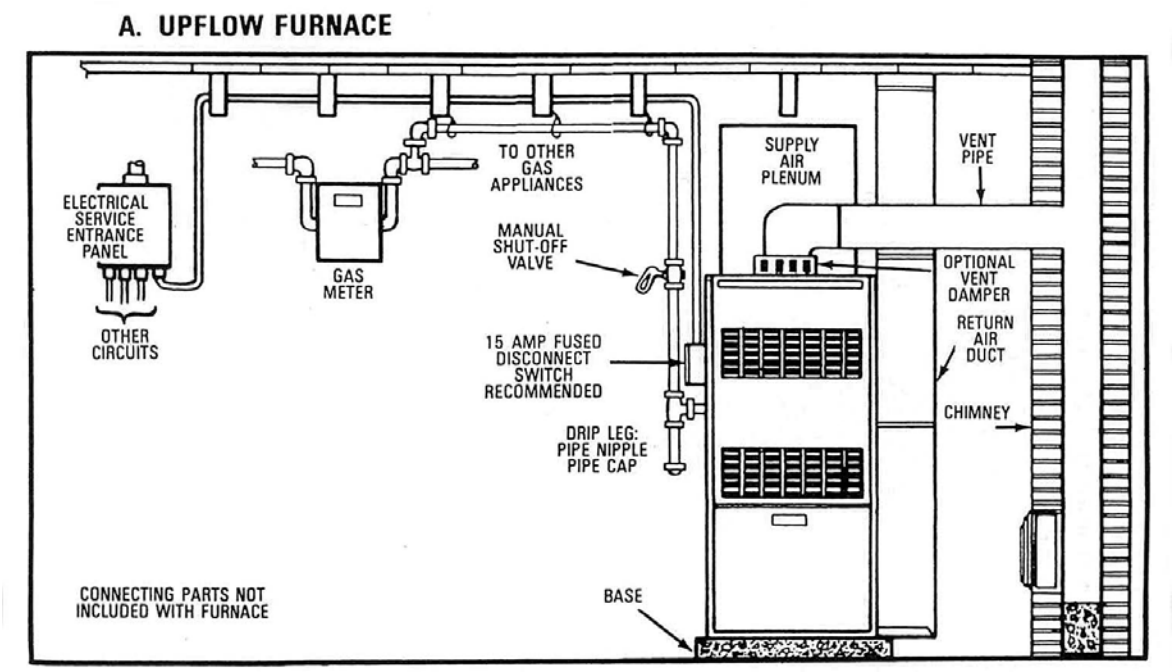

10.2. Basic Forced Air Furnace Components

Before we begin our discussion of the sequence of operation, let's get familiar with some of the components.

1) **Thermostat**: A heat-activated switch that opens and closes a set of contacts (a switch) automatically. The switch has an adjustable set point, usually from 50 - 90°. When the temperature around the thermostat falls below the set point, the contacts close, initiating the call for heat. When the room is raised up to the set point by the furnace, the contacts are opened, ending the call for heat. Most home thermostats use a voltage lower than household voltage created by the thermostat for safety.

2) **Transformer:** A device that takes household voltage applied to the furnace and lowers it for use in controlling the furnaces components. This lower voltage is safer for the homeowner as it is used in the thermostat that is in the living space.

3) **Mechanical Draft:** A motor and wheel, attached to the heat exchanger, are used to create the draft that can no longer exist naturally in higher efficiency furnaces. A proving switch is necessary to make sure the draft is established. The most common of these is the pressure switch. Without a proving device, the furnace could become unsafe if the mechanical draft system failed and the ignition process were started.

4) **Ignition source:** Provides the ignition for the pilot and/or burners. Ignition is provided by one of three sources.

   a) A standing pilot

   b) A high voltage spark

   c) A hot surface igniter

   Ignition is proved by many different devices to prevent raw fuel from flowing without being ignited.

   Remember that for ignition to take place, enough heat is needed to raise the air/fuel mixture to the combustion temperature of the fuel.

5) **Gas Valve:** A device that controls the flow and pressure of fuel to the pilot and/or burners.

6) **Pilot:** A device used to light the burners. The pilot is typically mounted in front of the burners and the gas valve controls its fuel delivery. The pilot is basically a small burner. It requires a proper air/fuel mixture and source of ignition just like the main burners. Pilots require an ignition source and are an ignition source all in one.

7) **Burners:** This is where the air/fuel mixture is introduced to the ignition device to provide combustion.

8) **Heat Exchanger:** Provides the chamber for hot combustion gasses to travel through. The heat from combustion heats the metal of the heat exchanger. This heat is conducted through the metal where it safely heats the air from the home passing across it. Remember that heat can only flow when there is a temperature difference, and heat only flows from hotter to cooler areas.

9) **Fan Switch:** This device turns the blower fan on and off as the heat exchanger warms up and cools down. It uses a heat-activated switch that opens and closes its contacts from set temperatures.

10) **Timer:** A switch that opens and closes its contacts by a set period of time.

11) **Blower Motor Section:** A motor and wheel provide the flow of air from the home to the furnace, across the heat exchanger, and back to the home. This is sometimes referred to as the "blower," "fan," or "circulator."

12) **Cabinet:** Provides a housing for all of the components listed above. We referred to this earlier as the "box" that the heating and blower section exist in.

13) **Ductwork:** Provides a path for the air to travel to and from each room in the home to the furnace.

14) **Safety Devices:** These devices make sure that the operation of the furnace is safe in the event of a component failure. Most of these devices do not typically affect the sequence of operation unless there is problem.

15) **Proving Devices:** These devices are used to make sure that certain components are operating for proper combustion. Remember that furnaces are not monitored and need to be able to operate safely. In the event of a failure of a component that could be unsafe, these switches usually cause the furnace to be disabled, causing the need for a technician.

16) **Limit:** A heat-activated switch set to a high temperature, which is mounted near the heat exchanger. In the event that the blower motor does not operate, the limit will shut off the burners.

17) **Rollout:** A heat activated switch set to a high temperature that is mounted in front of the burner area. If the heat exchanger of venting system is obstructed, the burners could roll out of the cabinet instead of flowing in the heat exchanger. If this happens, the rollout switch will shut off the burners.

18) **Spill Switch:** A heat-activated switch set to a high temperature, which is mounted in the draft hood. If the vent system were to become blocked, the vent gases, products of combustion, would be flowing into the home. If this happens, the spill switch will shut off the burners.

10.3. Basic Furnace Sequence of Operation

Now that we have a basic understanding of the components, let's arrange them into a sequence of operation. All furnaces can be broken down into six simple steps.

- The room thermostat calls for heat.
- Draft is established.
- Ignition is established.
- The blower "circulating fan" is activated.
- The room thermostat ends the call for heat.
- The blower "circulating fan" is de-activated.

Now let's break down each one of those steps to better understand what is happening.

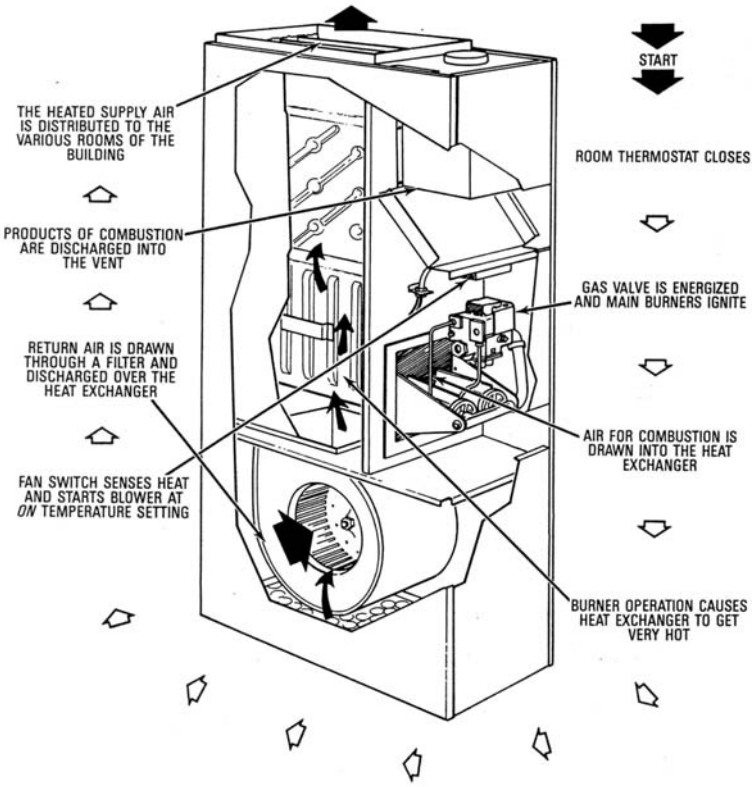

1) **<u>The room thermostat calls for heat</u>**.

   When the temperature in the home drops below the set point on the thermostat, it closes a set of contacts starting the sequence.

2) **<u>The draft is established</u>**.

   Draft is basically established one of two ways.

   Natural Draft - On older natural draft furnaces, the flow of combustion products is provided through an open style heat exchanger and the natural draft vent system discussed earlier. Because the heat exchanger has very little restriction, hot combustion products create draft naturally.

   Mechanical Draft – Newer, more efficient furnaces use a draft motor to provide the draft that can no longer occur naturally, due to restriction in the heat exchanger designed to remove more heat from the products of combustion. These furnaces will have a draft proving switch that closes when the draft is established.

3) **Ignition is established**.

Ignition is basically established in one of three ways.

Standing Pilot - Furnaces with a standing pilot, one that is lit all the time, are ready to ignite the main burners immediately on a call for heat. A proving device exists to ensure the pilot is actually there before the gas valve will allow the fuel to flow to the main burner(s).

Automatic Pilot - Auto pilot furnaces do not have a pilot on all the time. On a call for heat, the gas valve will allow fuel to flow to the pilot and energize the ignition source for the pilot, prove that the pilot exists, and then allow the fuel to flow to the main burners.

Direct Ignition - Direct ignition allows fuel to flow to the main burner and energizes the ignition source at the same time. These furnaces have no pilot at all. The proving device for these systems is on the burner itself. If the burners are not proved, the fuel flow to the main burners is shut off very quickly.

4) **The blower is activated**.

There are basically two ways to activate the blower.

Heat - When the heat exchanger reaches approximately 120-150°, a heat-activated fan switch closes its contacts, energizing the blower motor.

Time - A timer is activated when the call for heat is initiated. The timer is usually pre-set for about 30 seconds, at which time a relay closes its contacts, energizing the blower motor.

5) **The room thermostat ends the call for heat**.

When the temperature in the home is heated to the set point of the thermostat, it opens a set of contacts, ending the call for heat, turning off the burners only.

6) **The blower "circulating fan" is deactivated**.

Remember that after the burners are turned off, the metal of the heat exchanger is still warm and able to provide heat to the home. The blower is turned off after this heat has been removed by one of the same two ways it is turned on.

Temperature (Heat) - When the heat exchanger reaches approximately 90°, a heat-activated fan switch opens its contacts, de-energizing the blower motor.

Time - A timer is again activated when the call for heat is ended. The timer can be either pre-set or adjustable. When the timing ends, a relay opens its contacts de-energizing the blower motor.

This is the basic sequence of operation for all furnaces. As furnace efficiencies have improved, there are more components and safeties that add to the sequence of operation, but they all originate with this sequence.

11. Review Questions – Gas Furnace Sequence of Operation

1) After the room thermostat calls for heat, what is next in the sequence of operation of a gas furnace?

   a) Ignition is established.

   b) The blower is turned on.

   c) Draft is established

   d) The blower is turned off

2) Why do newer more efficient furnaces require mechanical draft and a proving device to make sure they are working before ignition can be established?

   a) It is necessary for the new style burners to work properly.

   b) To provide the draft that can no longer occur naturally, due to an open style heat exchanger.

   c) To provide the draft that can no longer occur naturally, due to restriction in the heat exchanger.

3) Why is it necessary to prove ignition?

   a) To prove that the igniter turned on

   b) To prove that the pilot gas turned on

   c) To turn on the blower motor

   d) To prove that the pilot exits, before allowing fuel to flow to the main burners

4) What does the blower stay on after the call for heat has ended?

   a) To cool off the motor

   b) To cool off the heat exchanger and put that heat into the home

   c) To push the left over combustion products out of the heat exchanger

   d) To make sure that the burners blow out

5) Safety devices make sure that the operation of the furnace is safe in the event of a component failure. What do most safety devices shut off or prevent from turning on when an unsafe condition is detected?

   a) The blower motor

   b) The burners

   c) The thermostat

   d) The spill switch

6) What do the Thermostat, Fan switch, Limit, Rollout, and Spill switch have in common?

   a) They are all used to turn on the burners

   b) They are all used to turn on the blower

   c) They are all safety devices

   d) They are all heat activated switches

12. Furnace Ratings

Furnaces are designed to provide comfort and efficiency for all sizes of homes. In this chapter we will cover how they are sized and rated for efficiency.

12.1. Capacity Rating

The capacity ratings of a furnace are tested and established during a one-hour constant run performance evaluation. This test is known as a "steady state" rating.

There are two ratings developed during this test:

1) **Input Rating** - The amount of BTUH (BTU per hour) the furnace will consume from the combustion of its fuel during a one-hour period.

2) **Output Rating (Bonnet)** - The amount of BTUH that a furnace will deliver into the home during the same one-hour period. This rating will tell how much heat the furnace will produce running non-stop for one hour.

Example:

INPUT		100,000	BTUH
OUTPUT		- 80,000	BTUH
	=	20,000	BTUH Loss

The 20,000 BTUH represents the amount of heat wasted up the vent.

As previously mentioned, the capacity rating is an instantaneous rating. Although the prior example gives the appearance that the furnace would operate at 80% efficiency, it should be noted that these ratings reflect a one-hour run evaluation of the furnace. The warm up, cool down, and off cycles are not considered in these ratings. **This rating does not indicate the annual efficiency of the furnace**.

12.2. The Manufacturer's DATA (Model) Plate

This plate is usually somewhere in the furnace cabinet around the burner area. It usually contains the following information:

- Model # and Serial #. Both are needed for repair parts, service questions, and technical information.

- Temperature rise.
- BTUH rating, input and output.
- Manifold gas pressure.

There may be some other information there, but these are the most important to maintenance, service, and installation of the unit.

12.3. Choosing the Right Furnace Size

Choosing the right furnace size is very important to help maintain the comfort level in the home and the life expectancy of the furnace. Selecting the right furnace starts with running a heat loss calculation of the home. These load calculation forms evaluate the home for the amount of heat it will lose in one hour in extreme conditions. These forms consider the size of the home and the worst outdoor temperatures expected, as well as insulation, windows, doors, basements, attics, and attached garages, just to name a few. After completing this form, the exact BTUH loss of the structure is known so that the correct size furnace can be selected.

If it were determined that 80,000 BTUH of heat is required to keep a home comfortable on the worst day of the year, the above-mentioned 100,000 BTUH input / 80,000 BTUH output furnace would be the right size for that home. Another important consideration would be to make sure the CFM airflow in the selected furnace is compatible with the air conditioner.

If another home required 100,000 BTUH of heat, the above-mentioned furnace would not be big enough. A furnace with an OUTPUT rating of 100,000 BTUH would be required.

Undersizing a furnace will obviously not keep the home warm on a cold day and will leave the customer dissatisfied with the furnace.

Oversizing may seem like a good idea on cold winter nights. But, unfortunately, an oversized furnace will cost a lot more to run for the entire season and would not last as long as a properly sized furnace. When the furnace is too big for the home, it will not run very long to heat the home, causing the furnace to run many short cycles. This will wear out the heat exchanger and the components, the same way city driving (a lot of starting and stopping) wears out the exhaust systems and brakes on a vehicle.

Note: *Most furnaces are listed by their INPUT BTUH rating, which is typically indicated in the model number. The data plate on the furnace and the manufacturer's literature will usually list the INPUT and OUTPUT BTUH.*

12.4. Efficiency Ratings of Furnaces

12.4.1. Combustion Efficiency

The combustion efficiency of a furnace indicates how effective the combustion process is at burning the fuel. When a technician measures the combustion efficiency, the furnace is allowed to run for around 10 minutes before the readings are taken. The results of this test show how much of the fuel is being converted into heat at a given point. It does not consider the warm up cycle, the cool down cycle, or the off time.

In the previous example of the 100,000 BTUH furnace with an output rating of 80,000 BTUH, the combustion efficiency would be 80%.

12.4.2. Annual Fuel Utilization Efficiency (AFUE)

When people talk in general about the "efficiency" of a furnace, they are usually referring to the AFUE efficiency and not the combustion efficiency. The AFUE gives the real picture of the efficiency of the furnace, because it takes into consideration the performance over an "annual" one year time period. This gives the furnace a chance to show how efficiently it can operate in full cycles in a variety of weather conditions, including months of off time.

For the customer, the AFUE rating gives them a true picture of where a dollar goes in utility costs.

- A.F.U.E. indicates the annual amount of fuel burned, compared to the amount of usable heat delivered into the home.
- When a customer is comparing furnaces for cost savings, this gives a true picture of the overall efficiency.

While many traditional natural draft furnaces have a combustion efficiency of 80%, most of these old furnaces only have an AFUE of 60% - 70% when the "real efficiency" is calculated.

***Note**: The AFUE rating for a specific unit can only be obtained from the manufacturer. These ratings are also published on furnaces by the model and serial number, in manuals such as the Preston's Guide. This information cannot be calculated in the field. It can only be estimated.*

AFUE: The Real Picture of Efficiency

The following illustration shows the effect of a dollar's worth of fuel purchased on an annual basis. This gives the customer the real picture of where a dollar in utility costs goes.

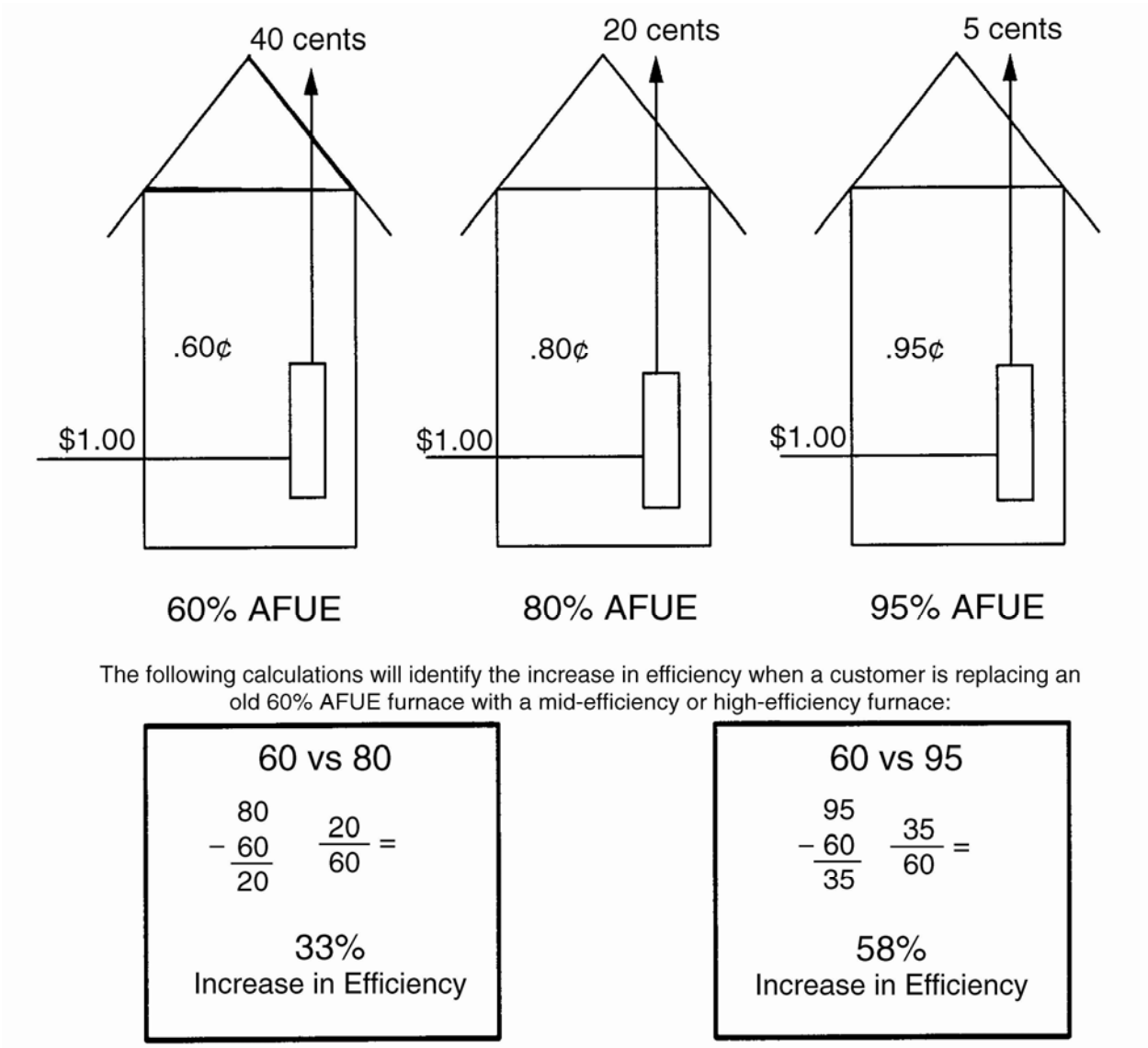

13. Review Questions – Furnace Ratings

1) The Input and Output capacity ratings of a furnace are established during what time interval?

   a) One hour of accumulated run time

   b) One hour of constant run time

   c) 24 hours of accumulated run time

   d) 24 hours of constant run time

2) What rating should be used to select the proper size furnace to install in a home?

   a) Output

   b) Input

   c) AFUE

   d) SEER

3) What is the combustion efficiency of a 65% AFUE furnace rated at 100,000 BTUH Input and 80,000 BTUH Output.

   a) 65%

   b) 50%

   c) 80%

   d) 100%

4) How can the AFUE of the furnace be determined?

   a) Field calculation with special instruments

   b) Dividing the Output rating from the Input rating

c) Dividing the Input rating from the Output rating

d) From the manufacturer, specific guides, or estimation

5) AFUE is a measurement of which of the following?

a) The BTUH that enters the home compared to the BTUH measured in the vent pipe

b) The amount of each dollar's worth of fuel purchased on an annual basis that remains in the house in the form of heat vs. the amount of heat that is wasted up the flue.

c) The annual percentage of gas that is actually burned in the burners

d) The percentage of temperature rise in the vent pipe compared to the temperature rise in the home.

6) Other than the model and serial numbers, which of the following is typically not found on the manufacturer's data plate?

a) AFUE

b) Temperature rise

c) BTUh, Input and Output ratings

d) Manifold gas pressure

14. Heating with Oil

The emphasis of this chapter is on oil burners. Most of the concepts that have already been learned about heating with other fuels apply to oil heat as well. Oil heat exchangers are designed to heat the air or water just like gas furnaces and hydronic systems. The big difference is the fuel and the combustion process. When it comes to the burner, combustion chamber, and the heat exchanger, the components are unique to this fuel alone. The combustion air and venting system are also different than gas-fired appliances.

Shown below is a typical oil furnace. As you can see the main difference is in the heat exchanger and burner design necessary for the proper combustion of oil.

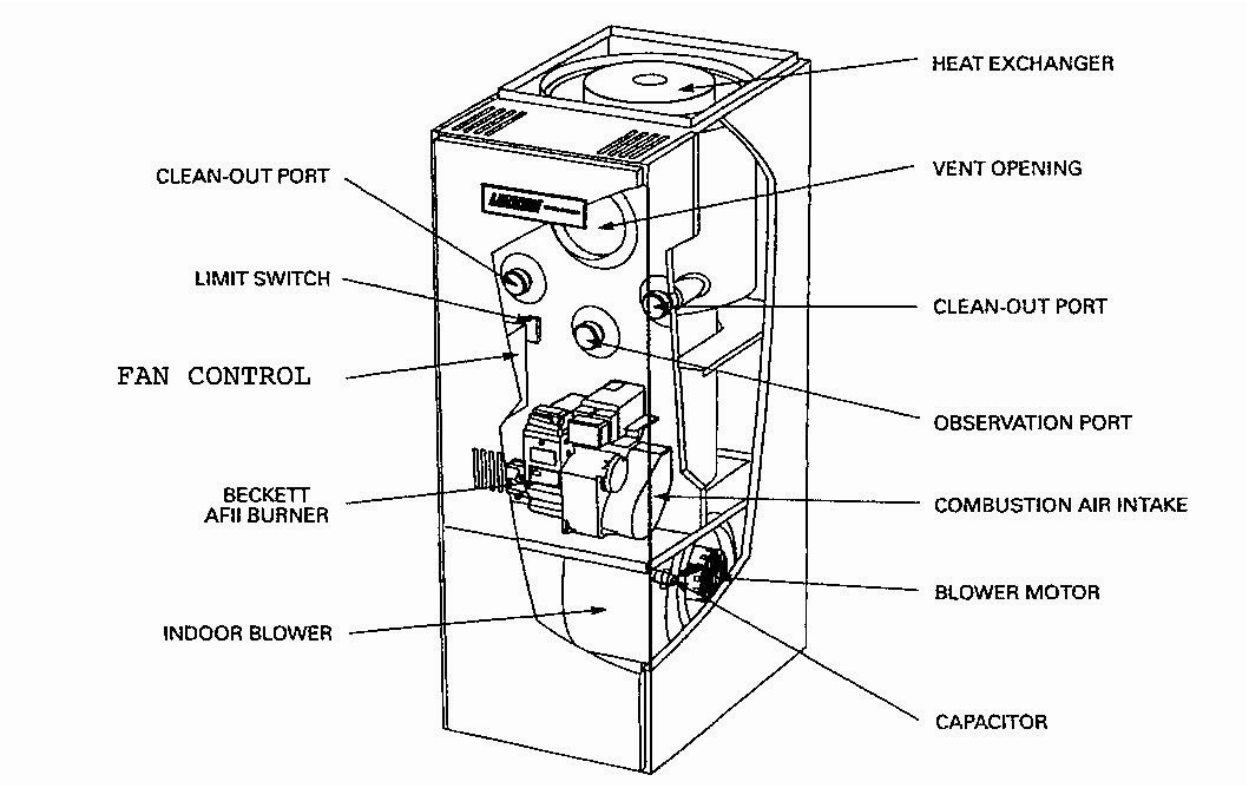

14.1. Characteristics of Fuel Oil

14.1.1. The Refinement Process

One of the products that is refined from crude oil is No. 2 domestic fuel oil. Crude oil is formed underground through decomposition of marine organisms, fish, and vegetation, and this organic matter

eventually became liquid or gas concentrated underground in pockets or pools. All petroleum products, including natural gas, gasoline, kerosene, No. 2 fuel oil, etc., contain carbon and hydrogen. The "refining" process that separates these various products can be quite complex. Eventually, one of the products is No. 2 fuel oil, which is most commonly used in oil burners for residential and light commercial applications. This fuel is a counterpart to diesel fuel but with a slightly different chemical makeup. The designation "No. 2" is used as a specification guide that defines some physical characteristics such as flash point, ash, viscosity, etc. All fuel oils are not alike, and the variations can have an impact on the burner operation.

The following standards and specifications are used in rating fuel oil.

14.1.2. Viscosity

Viscosity is the oil's resistance to flow. The viscosity rating is a measure of how much oil flows through a standard orifice within a specified amount of time. Oil with a high viscosity can contribute to poor atomization, delayed ignition, a noisy or pulsation flame, increased input, and possible sooting. This is particularly true in temperatures below 50 °F.

14.1.3. Pour Point

The pour point is the temperature at which oil will barely flow. This is usually 5°F above the point where oil forms a solid mass. The ASTM D 396 Standard for fuel oils lists 20°F as the maximum pour point for No. 2 fuel oils. However, random analysis shows that the typical pour point is approximately -20°F. To avoid problems in cold climates, No. 2 fuel oil is sometimes blended with approximately 25% or more of No. 1 distillate fuel (kerosene) to lower the pour and cloud points.

14.1.4. Cloud Point

Cloud point is the temperature at which wax crystals begin to form. Around 10° to 20° F above the pour point, wax crystals form, which can clog filters and strainers, restricting the oil flow. Raising the oil temperature causes the wax to go back into solution. ASTM D396 does not list a specification on cloud point.

14.1.5. Distillation Temperature

The distillation temperature test is when No. 2 fuel oil is vaporized and distilled (condensed) to determine the volatile components. During the refinery process, fuel oil is heated gradually in a flask until it vaporizes, and then is condensed into a graduated cylinder. The temperature at which condensation begins is called the initial boiling point (IBP).

14.1.6. Initial Boiling Point (IBP)

The ignition arc must provide enough heat energy to elevate the temperature of the atomized oil droplets to the IBP, so if the IBP is too high (over 400°F), it could cause ignition problems. These and other guidelines must be met and are regulated by ASTM (American Society for Testing and Materials Standards).

Your first clue that oil is not within ASTM specs might be a sudden rash of problems: delayed ignition, smoky fires, appliance sooting, noisy and dirty flames. Only through an analysis by a competent laboratory may the oil be shown as "out of the spec," whereas the supplier should be advised. However, if the oil is within specifications, but is near the maximum level for viscosity, pour point, or has an IBP above 400°F, chemical additives or blending with about 25% kerosene (No. 1 fuel oil) might be considered to make the oil more compatible with cold temperatures and to improve its ignition and combustion qualities.

14.2. Fuel Delivery & Measurements

Fuel oil is measured and sold by the gallon. The heating value of one gallon of No. 2 Fuel oil is 140,000 BTUs.

Fuel oil is delivered to the home by truck and pumped into a storage tank. The fuel tanks used in the residential market usually range between 200 to 1000-gallon capacity and fall into three categories: underground, above ground, and indoor. Each has its advantages and disadvantages.

14.2.1. Underground Tanks

Advantages:

1) Take up no space inside or outside the home.

2) Tanks are out of sight.

3) A large quantity of oil can be conveniently stored.

4) Better insulation from cold, compared to above ground tanks.

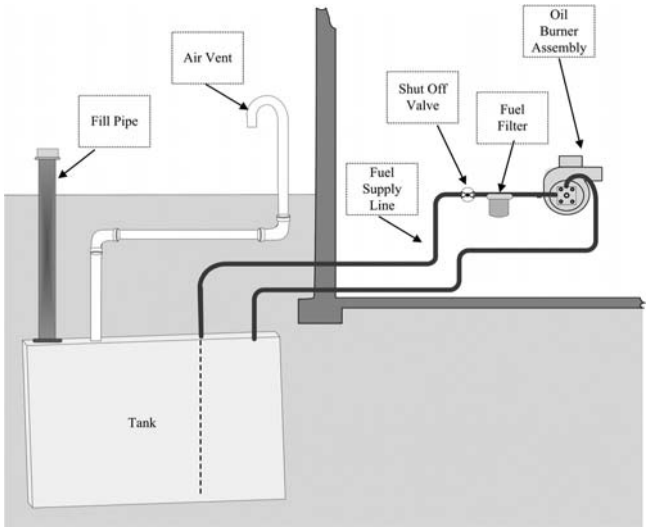

Disadvantages:

1) Expensive to install, inspect, and service.

2) Subject to effects of cold and underground moisture.

3) Well-made, properly installed tanks seldom leak—even after decades of service. However, leak detection and clean up are still important environmental concerns.

14.2.2. Above Ground Tanks

Advantages:

1) Less expensive than underground tanks to install and service.

2) If leaks occur, they can be easily detected in time to avoid environmental problems.

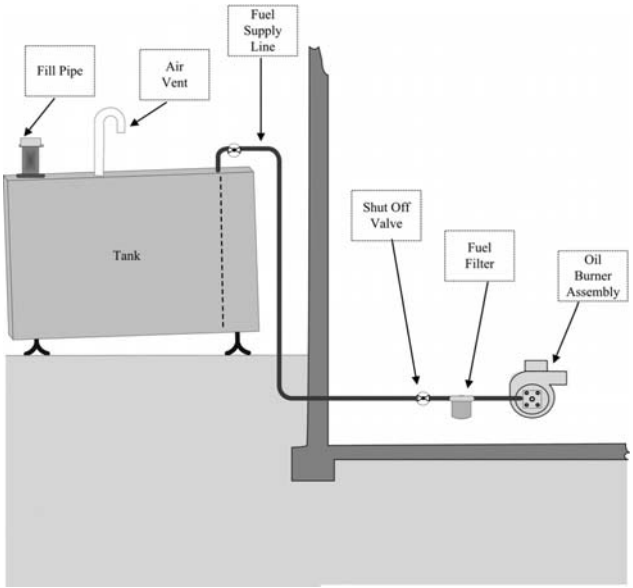

Disadvantages:

1) Exposed to cold and moisture. (These problems can be reduced by providing a shelter for the tank.)

2) Take up outdoor space.

3) May detract from appearance of home.

14.2.3. Indoor Tanks

Advantages:

1) Not affected by outside cold and moisture.

2) Less expensive to install and service than underground tanks.

3) Leaks are unlikely to occur. If they do, they are easily spotted and repaired.

Disadvantages:

1) Take up space inside home.

2) Some oil smell may be present.

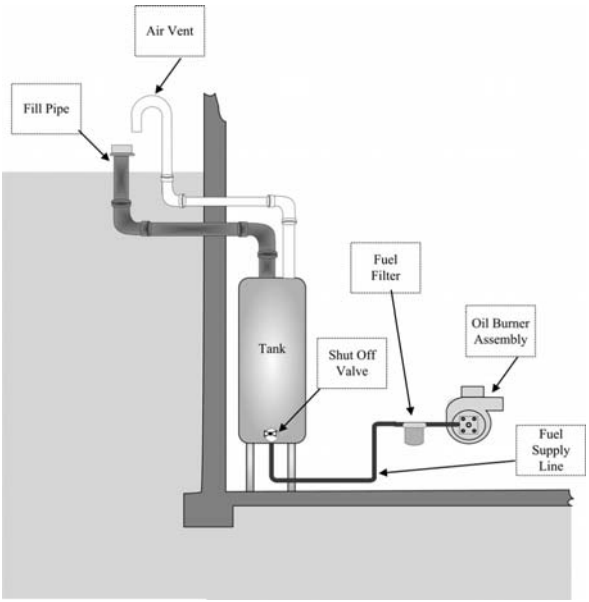

14.3. The Oil Delivery System

The oil delivery system includes all components required to transport oil from the storage tank to the burner. These include pumps, pipes, valves, filters, and controls. The fuel piping system is under negative pressure and relies on the fuel pump in the burner assembly to pull the fuel from the tank to the burner. Due to this negative pressure, any leaks in the fuel system usually result in air being drawn into the fuel supply, potentially causing the system to become air-locked. For this reason, as well as safety concerns, the components in the fuel supply system must be free from leaks.

14.3.1. One Pipe Systems

One Pipe Systems have a single oil supply line from the fuel tank to the burner and are used when the tank is located at or above the level of the burner. With this system, the entire flow of fuel in the supply line is burned in the burner. Fuel line leaks in this system can easily cause the pump to loose its prime and become air-locked. When this happens, the pump must be bled and/or re-primed.

14.3.2. Two Pipe Systems

Two Pipe Systems have a fuel line supplying oil from the tank to the burner and a return line to flow the excess oil from the pump back to the tank. With this system, the flow of fuel in the supply line is higher than what is used in the burner. The relief valve in the oil pump, set to regulate the burner's oil pressure,

sends the excess oil back to the tank instead of internally relieving it to the inlet of the pump like a one pipe system. These systems are used when the fuel supply tank is located below the level of the burner, such as a tank in the basement with a furnace on the second floor.

With a higher volume of flow through the pump and a constant flow of fuel back to the tank, two pipe systems are less susceptible to air-locking.

14.3.3. Oil Filters

Oil Filters are usually in the line between the tank and the pump. These should be changed out when routine maintenance is preformed. Typically there are only about two to three different styles of filters.

14.4. The Combustion Process

Fuel oil is like diesel fuel in the fact that it will not readily ignite like other volatile petroleum products, such as gasoline; therefore, in an oil-fired appliance the oil must be atomized into a fine mist and mixed with air before it can be ignited.

When fuel oil is burned, the chemical energy that is stored in the oil is released in another form of energy: heat. But to create this conversion of energy, an external source of heat must be applied to the oil droplets to start the reaction. The electric spark delivered by the electrodes of an oil burner provides the initial heat that causes oil droplets to become oil vapor and eventually burn continuously. This burning then heats the surrounding oil droplets causing them to burn. This process continues until all or most of the droplets are vaporizing and burning. If the conditions for combustion are ideal, all oil droplets will burn completely and cleanly within the combustion zone.

Since fuel oil primarily consists of 85% carbon and 15% hydrogen, combustion of fuel oil is the rapid combining of carbon, hydrogen, and oxygen, along with a source of ignition. The burner blower provides the proper quantity of oxygen. As we know air is made up of approximately 79% nitrogen and 21% oxygen. Nitrogen is not considered a part of the actual combustion process so it simply goes along for a free ride.

The following diagram shows the combustion process in "ideal" or near perfect conditions. Remember that air is primarily made up of nitrogen, which is not actually used in the combustion process but inherently present in the combustion air.

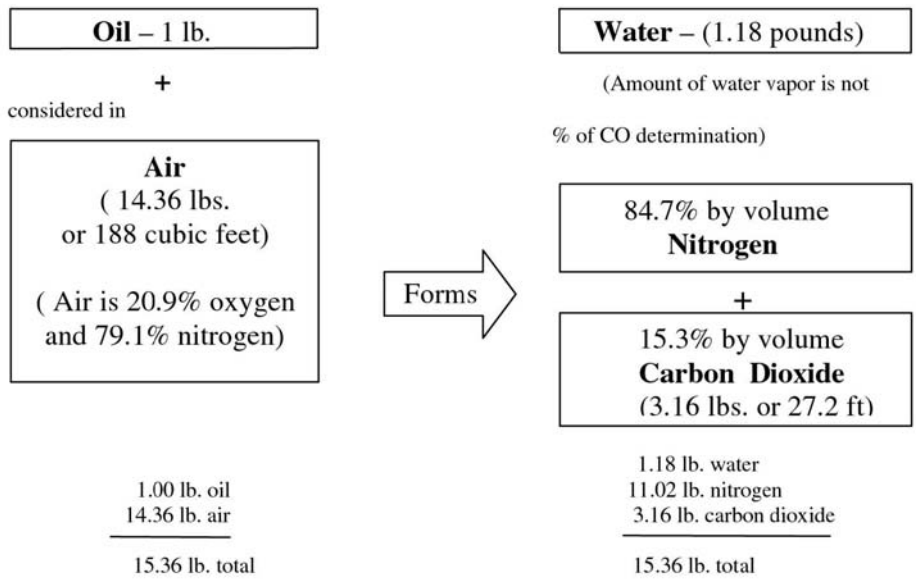

Amount by weight and volume of combustion products when 1 lb. of fuel oil is burned (0% excess air).

14.5. The Role of Excess Air

Properly burning fuel oil requires the proper quantities of combustion air and also another form of air called excess air. This excess air does not react during the combustion process but is a requirement to insure the necessary mixing of fuel and oxygen. However, excess air is one of the major causes of lower efficiencies. To see how this happens consider that excess air:

- Dilutes combustion gases
- Absorbs heat
- Drops overall temperature of combustion gases
- Lowers the flame temperature
- Causes a poorer heat exchange to the distribution medium

Excess air is simply air over and above the theoretical requirement for the combustion of fuel oil. The additional oxygen provided by the excess air ensures that all the carbon and hydrogen in the fuel oil comes in contact with ample oxygen to properly burn. Therefore we can see that excess air is a necessity but an overabundance of it should be avoided.

The following diagram shows the combustion process with the additional 50% excess air. Remember that nitrogen is present in the excess air as well as the combustion air.

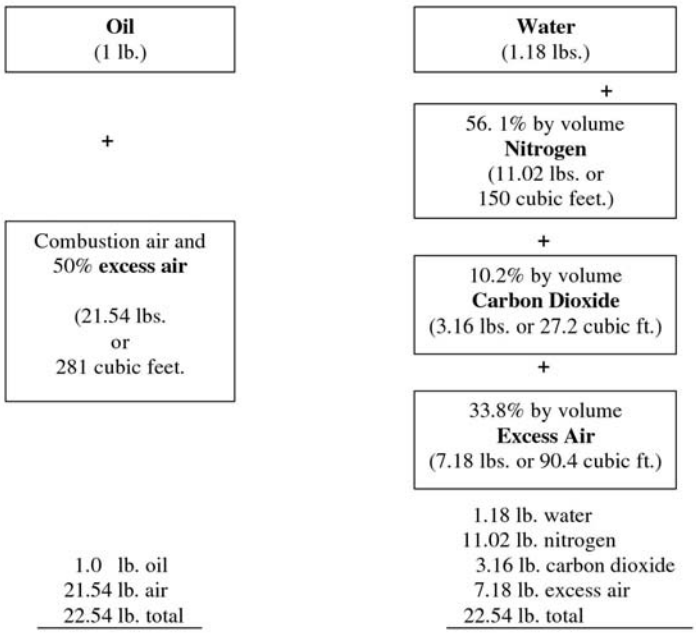

Amount of weight and volume of combustion products when 1 lb. of fuel oil is burned (50% excess air).

14.6. The Relationship of Excess Air, Smoke, and Efficiency

During the combustion of oil, some smoke is usually generated because some of the oil droplets do not contact enough oxygen to complete the reaction that forms carbon dioxide. This smoke consists mainly of small particles of unburned carbon.

As you have learned, as the amount of excess air is increased, the efficiency of transferring heat to the heat exchange medium (hot water, warm air, or steam) is reduced. This increase in the amount of excess air also reduces the amount of smoke. Oddly enough, as the amount of excess air is reduced, both the amount of smoke and the efficiency of the system increase. However, while some of this smoke is emitted through the stack, other smoke particles stick to the inside of the heat exchanger surface and act as an insulation and can eventually clog up the flue passages. Over time this build up, called "sooting," leads to reduced efficiency and more maintenance and service calls.

A delicate balance of the combustion process must be achieved between smoke generation (caused by insufficient excess air) and reduced heat transfer efficiency and an increased volume of combustion products (caused by too much excess air). To obtain optimum burner performance of an oil furnace we

must incorporate the use of a combustion analyzer, a smoke measuring device and a draft gauge. These invaluable tools will allow us to provide the proper amount of excess air without over doing it.

This is an illustration of a typical chart that compares smoke and efficiency. This chart will vary with different burners and equipment.

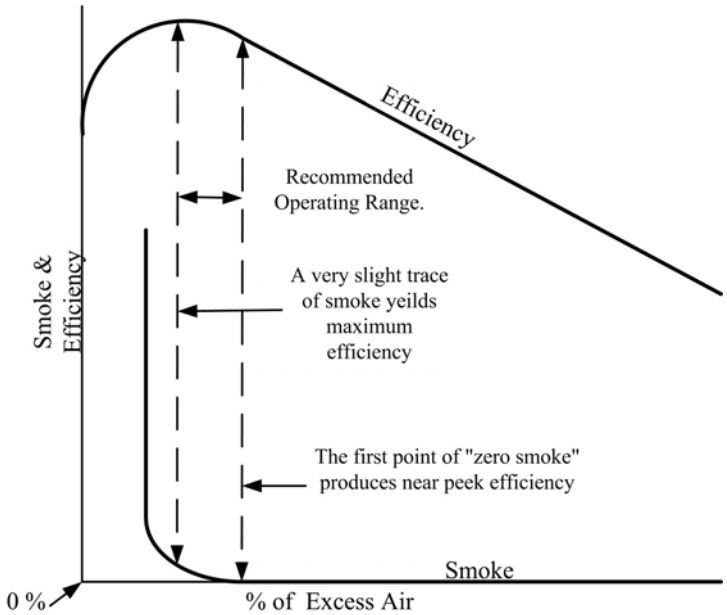

14.7. Combustion Air Requirements

The Standard for the Installation of Oil-Burning Equipment 2001 (NFPA 31) is used as a reference for the regulations for oil-fired appliances.

14.8. Venting of Oil Furnaces

14.8.1. Draft

Just like gas-fired appliances, natural draft occurs when gasses that are heated expand so that a given volume of hot gas will weigh less than an equal volume of the same gas at a cooler temperature. These gasses are contained in a tall chimney or flue pipe, and this column of rising hot gases creates a vacuum or suction called "draft." The higher the chimney or flue pipe is, the greater the draft will be.

Since the outside temperature and flue gas temperature can change, the draft will not be constant. When the heating unit starts up, the chimney will be filled with cool gases. After the heating unit has operated for a while, the gases and the chimney surface will be warmer, and the draft will increase. As the outside air temperature drops, the draft will also increase as well.

14.8.2. The Draft Regulator

Because oil-fired appliances require a delicate balance of air to keep them burning properly, it is important to understand that a constant draft is needed through the heating unit. Since natural draft as obtained from a chimney or flue pipe will vary, it is necessary to have some sort of regulation. The draft regulator is installed in the flue pipe just above the appliance and is designed to maintain this stable or fixed draft that is needed throughout the heating equipment, within the limits of available draft from the chimney or flue pipe.

In an oil furnace, the draft regulator provides the same function as a draft diverter does in a gas furnace, except it has control of how much air enters the vent system rather than being wide open. By the use of a barometric damper, draft through the system at the set point of the damper.

- As the draft in the stack becomes too high, (too much draft over the fire) the damper is pulled open allowing more air to be pulled into the stack, thus slowing down the draft overfire.
- As the draft in the stack decreases (not enough draft over the fire), the damper regulates down the flow of air into the stack, giving it the highest possible draft through the heating unit under those conditions.

14.8.3. Draft Measurements

The draft should be measured by using a draft gauge. It cannot be estimated or "eye balled." The draft should be checked at the following two locations in the heating unit:

1) **Draft Over the Fire**

The overfire draft must be constant so that the burner air delivery will not change. With appliances designed for negative draft operation, overfire draft is the most important and should be measured first. Normally, overfire draft of ranges from -.01" to -.02" wc., which will be high enough to prevent leakage of combustion products into the home and still not cause large air leaks or standby losses.

Note: Some systems are designed for positive pressure overfire. Consult the manufacturer's specifications for draft and venting requirements.

Because draft will not exist in any great amount during a cold startup, the burner should not depend on the additional combustion air caused by draft. The best way to ensure this does not happen is to set the burner for smoke-free combustion with an overfire draft on the low end of the range. If a burner cannot produce good smoke-free combustion under low draft conditions, repairs should be made. Using a high draft setting to obtain enough combustion air for clean burner operation is like depending on a crutch, which is not always there. A burner, which gives clean combustion only with high draft, will cause smoke and soot any time the chimney is not producing high draft.

The overfire draft is also affected by soot buildup in the heat exchanger. As soot builds up, the heat exchanger passages are reduced, causing a greater resistance to the flow of gases. This causes the overfire draft to drop, which reduces the flow of air to the burner flame, producing even more smoke. It is a vicious cycle that gets increasingly worse.

2) **Breech or Stack Draft**

After the overfire draft is set, the draft at the breech connection should be measured. The breech draft will normally be slightly more than the overfire draft because the flow of gases is restricted slightly in the heat exchanger. This restriction, or lack of it, is a clue to the design and condition of the heat exchanger. A clean heat exchanger of good design will cause the draft measured in the breech to be in the range of -.03 " to -.06" wc., while the draft measured over the fire is -.01" to -.02" wc.

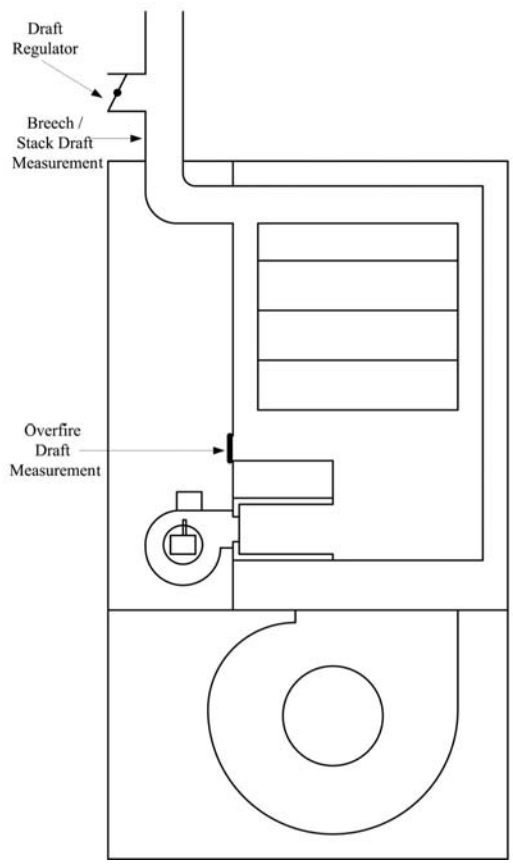

- Excessively high draft through the heating unit (draft regulator closed too much) increases the air delivery of the burner fan, and can increase air leakage into the heating unit. Although the smoke level is usually very low at this point, the operating efficiency of the system is reduced. Other indicators of high draft are: reduced CO2 level, increased stack temperature, and higher standby losses up the chimney during burner off periods.

To correct the excessive draft, adjust the draft regulator weight to allow the regulator door to open more.

– Too little draft through the heating unit (draft regulator open too much) can reduce the combustion air delivery of the burner, which can result in an increase in the production of smoke. To correct the low draft, adjust the draft regulator weight to allow the regulator door to close more.

14.9. Furnace Components

14.9.1. The Oil Burner Assembly

The functions of an oil burner are to break fuel oil into small droplets, mix the droplets with air, and ignite the resulting spray to form a flame.

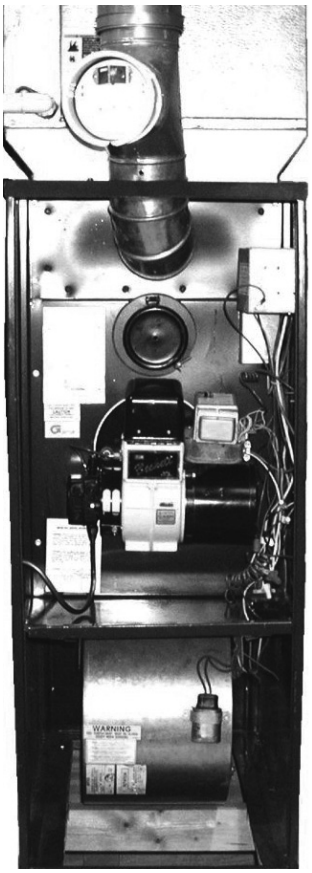

The burner motor not only drives the combustion blower to supply air for combustion process, it also drives the oil pump that pressurizes the oil and sends it into the burner assembly to be ignited. Oil is delivered under pressure from the oil pump to the burner nozzle oil approximately 100 psig (some models require pressures as high as 140 psig).

The oil burner assembly consists of the following items:

- The **primary control** is the ignition control board that receives a low voltage command from the thermostat on call for heat. It is the "brain" that controls the entire ignition sequence.
- The **burner motor** is activated by the primary control and its shaft drives the combustion blower and the oil pump.
- The **combustion blower** provides the air for combustion prior to the burner.
- The **oil pump** is driven off of the end of the burner motor's shaft and is used to provide fuel under high-pressure to the nozzle.
- The **ignition transformer** provides high voltage to the electrodes to generate a spark.

- The **gun assembly** houses the burner nozzle and the electrodes in one unit. The nozzle receives high-pressure fuel from the pump, while the electrodes receive high voltage from the ignition transformer. With the air provided from the blower, the combination of these items produces a flame.

14.9.2. The Gun Assembly

As previously mentioned, the gun assembly houses the nozzle and the electrodes. The function of the nozzle is to break up (atomize) the oil into a spray of tiny droplets from .0002 to .0100 inches in diameter, which evaporate rapidly into a vapor. The vapor is then mixed at the burner head with a stream of air from the combustion blower.

The nozzle is selected by the manufacturer to deliver the correct flame for the burner and has the following specifications.

- **GPH** (gallons per hour) - This determines the firing rate by controlling the amount of fuel that is delivered into the burner.

- **Spray angle** varies from 30° to 90° and is matched to the combustion chamber design.

- **Spray pattern** ranges from solid, hollow, and semi-solid and is also matched to the combustion chamber design.

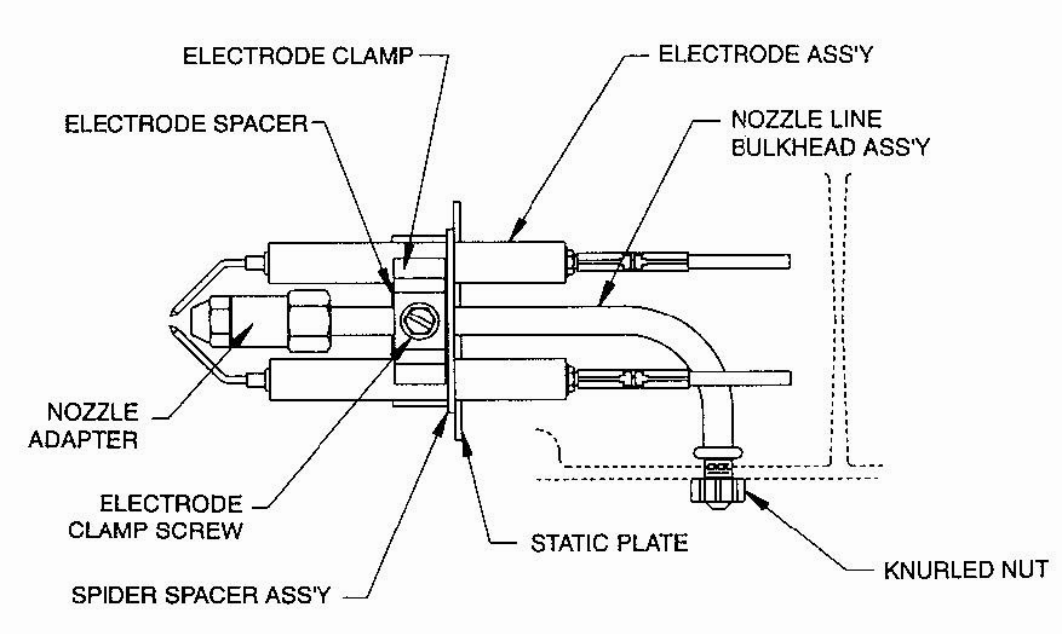

14.9.3. The Combustion Chamber ("Fire Box")

The purpose of the combustion chamber is to surround the flame and reflect heat back into it to aid the combustion process and achieve more complete burning of oil. The wall in most modern combustion chambers is made of a soft refractory material; however, some combustion chambers in old boilers and units of that type have a hard brick-like wall. The design of the combustion chamber and the selection of the burner and nozzle must be matched to provide a combustion process that will burn the fuel efficiently. The components must be designed so that the spray of oil does not touch the walls of the chamber. The chamber must be made of the correct material, properly sized for the nozzle-firing rate, shaped correctly, and of the proper height.

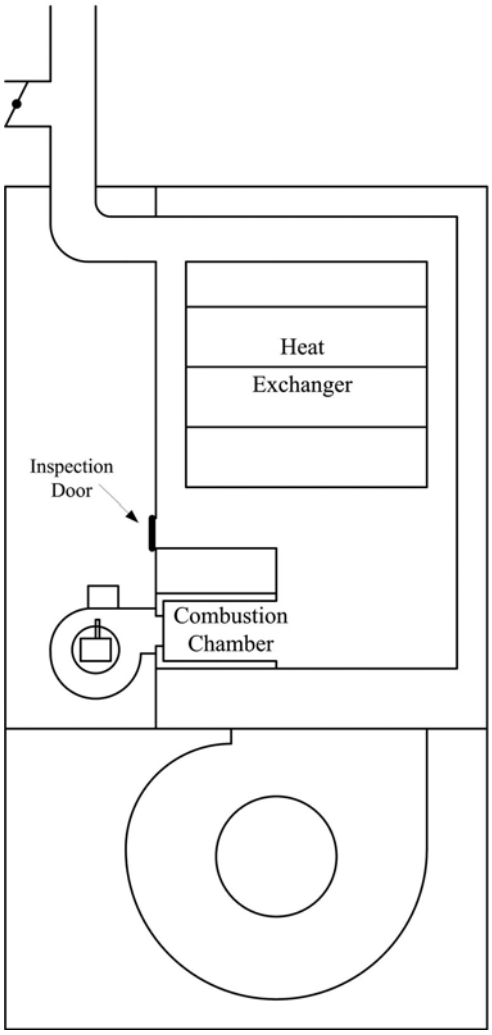

Once the burner and heat exchanger of an oil furnace are understood, oil heat, whether forced air or boiler, is really not that different from gas. It may be a little smelly, but it can be a very efficient and comfortable fuel to heat with. These furnaces require annual maintenance, just like any other furnace for efficiency and safety.

14.9.4. The Heat Exchanger

The purpose of the heat exchanger is to transfer heat from the burner flame to the air or water used to heat the home. The heat exchanger is an integral part of the furnace or boiler. The exchanger should be inspected for cracks and cleaned periodically. If soot is allowed to accumulate on the heat exchanger, the efficiency of the heating appliance can be seriously impaired. Proper adjustment of the burner to avoid smoke (the cause of soot) is essential to keeping the heat exchanger clean.

14.10. Oil Furnace Sequence of Operation

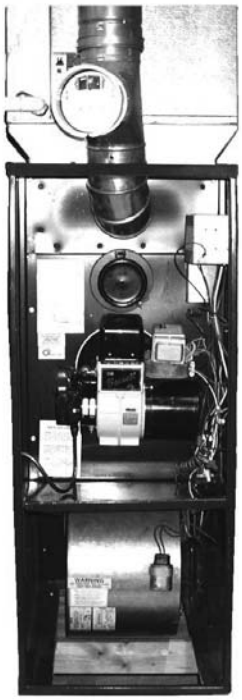

The basic oil furnace operation is as follows:

- The room thermostat calls for heat.
- Draft and ignition are established.
- The blower "circulating fan" is activated.
- The room thermostat ends the call for heat.
- The blower "circulating fan" is deactivated.

Now let's break down each one of those steps to understand what is happening a little better.

1) **The room thermostat calls for heat**.

   Just like with a gas furnace, when the temperature in the home drops below the set point on the thermostat, the contacts in the thermostat close, sending a low voltage signal to the heating circuit. In oil furnaces, the primary control receives this signal.

2) **Draft and ignition are established**.

   Most oil heating units use a natural draft system as previously discussed. As soon as the burner fires, draft is present.

   When the primary control activates the burner motor, the combustion blower wheel and oil pump start. At the same time, the primary control activates the ignition transformer, providing the high voltage energy needed by the electrodes to create a spark. With all three elements of the combustion triangle met, the burner then produces a flame.

   In most modern oil heating units, a visual light detector, called a CAD cell, provides the flame safety. Wired directly to the primary control, it is mounted in the burner head and proves ignition by sensing a specific light-wave in the flame. If the flame is not sensed, the primary control will lockout the burner after a short period of time.

In some older oil-heating units, a thermal stack switch, called a pyrostat, provides the flame safety. This is a heat-activated switch mounted in vent stack leaving the unit, which senses the temperature of the flue gas. If the flue gas does not come up to temperature in a specified amount of time, the stack switch will lockout the burner.

This combustion process continues until the burner is shut down for the off cycle by the thermostat, ending its call for heat.

3) **The blower "circulating fan" is activated**.

Just like with a gas furnace, there are basically two ways to activate the blower.

- **Heat** - When the heat exchanger reaches approximately 120º - 150º, a heat-activated fan switch closes its contact, energizing the blower motor.

- **Time** - A timer is activated when the call for heat is initiated. The timer is usually pre-set for about 30 seconds, at which time a relay closes its contacts, energizing the blower motor.

4) **The room thermostat ends the call for heat**.

Just like with a gas furnace, when the temperature in the home is heated to the set point of the thermostat, it opens a set of contacts, ending the call for heat, turning off the burners only.

5) **The blower "circulating fan" is deactivated**.

Just like with a gas furnace, after the burners are turned off, the metal of the heat exchanger is still warm and able to provide heat to the home. The blower is turned off after this heat has been removed by one of the same two ways it was turned on.

- **Temperature (Heat)** - when the heat exchanger reaches approximately 90º, a heat-activated fan switch opens its contacts, de-energizing the blower motor.

- **Time** - A timer is again activated when a call for heat is ended. The timer can be either pre-set or adjustable. When the timing ends a relay opens its contacts, de-energizing the blower motor.

15. Review Questions – Heating with Oil

1) What main components are uniquely different on a furnace that burns oil instead of gas?

   a) The heat exchanger and the blower

   b) The heat exchanger and the burner

   c) The burner and the blower

   d) The burner and the thermostat

2) How many BTUs of heat will one gallon of fuel oil produce?

   a) 100,000

   b) 40,000

   c) 140,000

   d) 240,000

3) Oil storage tanks can be installed outside underground, above ground and inside the home. Other than cost and leaks, what is the biggest advantage to storing oil inside the home?

   a) Not affected by outside cold and moisture

   b) There are no smelly odors

   c) They take up very little space

   d) They are very decorative

4) The oil delivery system consists of a storage tank, shut off, oil filter and oil line. The most common system is the One Pipe System. What is one disadvantage of this system?

   a) The flow of fuel in the supply line is higher

   b) The entire flow of fuel in the supply line is not burned

   c) The tank cannot be located above the level of the burner

   d) Leaks can easily cause the pump to loose its prime and become air locked

5) In an oil fired furnace, what must happen to the oil before it will ignite?

   a) It must be liquefied

   b) The oil droplets must be heated to become oil vapor

   c) The oil droplets must be cooled to become oil vapor

   d) Oil will burn in its liquid state

6) Excess air is necessary for complete combustion, efficiency and to produce as little smoke as possible. What effect does lowering the excess air have on efficiency and smoke?

   a) Efficiency and smoke generation goes up.

   b) Efficiency and smoke generation goes down.

   c) Efficiency goes up and smoke goes down.

   d) Efficiency goes down and smoke goes up.

7) What is the purpose of the Draft Regulator?

   a) To create a forced draft in the chimney.

   b) To control the amount of combustion air that enters the burner.

   c) To maintain a stable or fixed draft through the furnace

   d) To maintain a stable or fixed draft through the chimney

8) The oil pump delivers the oil under high pressure to the oil nozzle for proper atomization. What is the typical oil pressure produced by the pump?

   a) 200 psig

   b) 100 psig

   c) 50 psig

   d) 10 psig

9) The function of the nozzle is to break up (atomize) the oil into a spray of tiny droplets, which evaporate rapidly into a vapor. What are the three specifications needed to select the correct oil nozzle?

   a) GPH, spray pattern, pressure

   b) GPH, spray angle, pressure

   c) GPM, spray angle, pressure

   d) GPH, spray angle, spray pattern

10) Which of the following is not a purpose of the combustion chamber (Fire Box)?

   a) Transfer heat from the burner flame to the air or water used to heat the home.

   b) Surround the flame

   c) Reflect the heat and aid the combustion process

   d) Protect the heat exchanger

11) On a call for heat, the oil primary control turns on the burner motor and the ignition transformer. What two devices do the burner motor drive?

a) The oil pump and the circulating fan.

b) The oil pump and the combustion blower wheel.

c) The combustion blower wheel and the circulating fan.

d) The combustion blower wheel and the Cad cell.

16. Glossary of Terms

AFUE	Annual Fuel Utilization Efficiency
AGA	American Gas Association
Ambient	Surrounding air
ANSI	American National Standards Institute
ASHRAE	American Society of Heating, Refrigeration, and Air Conditioning Engineers, Inc.
Atmospheric Pressure	A measurement of a gas pressure exerted equally in all directions in the atmosphere - usually expressed in pounds per square inch (psia). Atmospheric pressure at sea level is 14.7 psia.
Boiling Point	The temperature at a given pressure level at which a substance begins to change from liquid to gas. As more heat (latent heat) is added, the change continues.
BTU (British Thermal Unit)	A measurement of the amount of heat necessary to raise one pound of water one degree Fahrenheit - regardless of time. This is the most common measurement used to define the quantity of heat being moved.
BTUH	The amount of BTUs created or needed per hour.
Carbon Dioxide (CO2)	An odorless, colorless gas formed by the complete combustion of carbon.
Carbon Monoxide (CO)	An odorless, colorless, gas produced from incomplete combustion.
Combustion	The rapid oxidation of a substance.
Conduction	The transfer of heat through a solid or liquid that is not moving or flowing.
Convection	The transfer of heat through a (fluid) liquid or gas (mainly air) that has a flow.
EPA	Environmental Protection Agency
Fluid	Anything that flows. Example: liquids and gases.
GAMA	Gas Appliance Manufacturers Association
Heat	A form of energy, neither created nor destroyed, that can be moved from one place to another.
Heat Transfer	The process of moving heat from one place to another. Heat flows from warmer areas to cooler areas.
Horizontal	Side to side, even with the horizon.

Inches Water Column	A low pressure measurement typically used for gas pressure, static pressure in ductwork, and pressure switches. 1 PSI = 16 ounces = 27.71 inches of Water column (in. wc.)("wc.)
Inert	Non-combustible.
Input BTU	The total amount of BTUs that an appliance will consume in one hour.
Manifold gas pressure	The pressure that the burner was designed to run at. This is set by the manufacturer and adjusted by the technician in the gas valve in the appliance.
Mechanical Room	A name given to a room where mechanical appliances are installed, such as the furnace and water heater. In commercial applications this room is usually required to have a fire-rated door.
Nitrogen (N)	An inert gas commonly found in nature. Makes up about 78%-80% of the air we breathe.
NFGC	National Fuel Gas Code
NFPA	Nation Fire Prevention Association
Output BTU	The amount of input BTUs that appliance will provide for the building being heated in one hour. The difference in BTUs goes up the vent.
Oxygen (O2)	A common element found in nature. Makes up about 20%-21% of the air that we breathe. Reacts with other materials in a process called oxidation.
Radiation	Heat traveling through space and airwaves that does not heat the air, but heats the object it hits.
Return air	The unconditioned air that comes from the home and enters the heating or cooling equipment. Return registers draw air in; therefore, the return side of the system is in a negative pressure.
Supply air	The conditioned air (heated or cooled) that leaves the equipment to go back into the home. Supply registers blow air out; therefore, the supply side of the system is under positive pressure.
Supply gas pressure	The pressure that the fuel provider sets from the supply meter or tank to the gas valve in the furnace.
Therm	A term used by the utility company. It refers to 100,000 BTUH of heat.
UL	Underwriters Laboratory
Vent	A passageway used to convey flue gases from gas utilization equipment, or the vent connectors, to the outside atmosphere.
Vent Connector	The pipe or duct that connects a fuel-gas-burning appliance to a vent or chimney.
Vertical	Up and down.